OCTOGON

MANUAL

TXMA

RAIL TEMPERATURE SENSOR

Operating manual



Document	Version	Date	Applies to
Operating manual	V00x	11/2026	TXMA, Pt100 4-wire, output 4 ... 20 mA

This operating manual describes use, safety, mounting on the rail, electrical connection, configuration, technical data and dimensions of the TXMA rail temperature sensor.

Contents

1 General ... 2
1.1 Use ... 2
1.2 Safety instructions ... 2
1.3 Device ... 2
2 Mounting ... 3
3 Electrical connection ... 3
3.1 Connecting plan ... 3
3.2 Load ... 4
4 Configuration ... 4
5 Technical data ... 5
5.1 Input and output ... 5
5.2 Performance ... 5
5.3 Supply and environment ... 5
5.4 Mechanics ... 5
6 Maintenance ... 6
7 Dimensions ... 6

1 General

1.1 Use

A sensor that measures the temperature of the running rail and controls the point heating from it. The housing fits the rail types S 49, S 54, UIC 60 and R 65 without adaptation.

Use the sensor only for this purpose and only within the values given in chapter 5.

1.2 Safety instructions

Warning Mounting, connection and configuration only by qualified staff. Work on the rail only according to the rules and with the permission of the operator of the line. Switch off the supply of the point heating control before connecting. The supply must be within the values given in chapter 5. Do not put a damaged instrument or a damaged cable into operation. Non-compliance may cause injuries and damage.

1.3 Device

Feature	Version
Design	rail temperature sensor with transmitter, fully potted
Sensing element	Pt100, 4-wire, class A
Output	4 ... 20 mA, invertible to 20 ... 4 mA, 2-wire
Rail types	S 49 · S 54 · UIC 60 · R 65
Connection	cable H07BQ-F, 2 × 1.5 mm², PG 11
Manufacturer type	STSBA

2 Mounting

Caution The sensor case must be mounted below the heating rod.

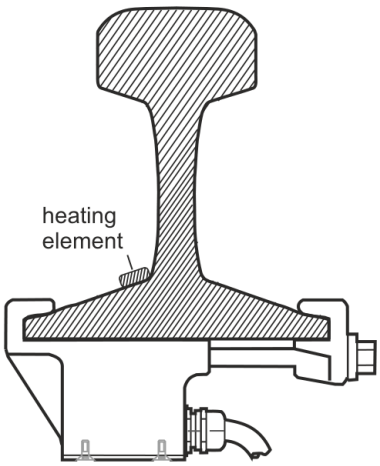

Position of the sensor case on the rail (cross-section)

Fastening by claw, threaded rod M10, strength 10.9, tightening torque 68 Nm. Counter claw and nut fit all rail types (S 49, S 54, UIC 60, R 65).

The sensor has to be mounted below the heating rod — otherwise it measures the heating instead of the rail.

3 Electrical connection

Cable H07BQ-F, 2 × 1.5 mm², led out of the potting via a PG 11 gland, no connector.

Brown +, blue –: 2-wire, 4 ... 20 mA, to the point heating control.

Configuration set: red +, black – to the sensor; yellow +, green – to the supply; PC via RS 232-C.

Yellow and green only to configure during operation; for that, interrupt the link sensor – control.

3.1 Connecting plan

Pay close attention to the connecting plan, particularly when connecting digital temperature recorders.

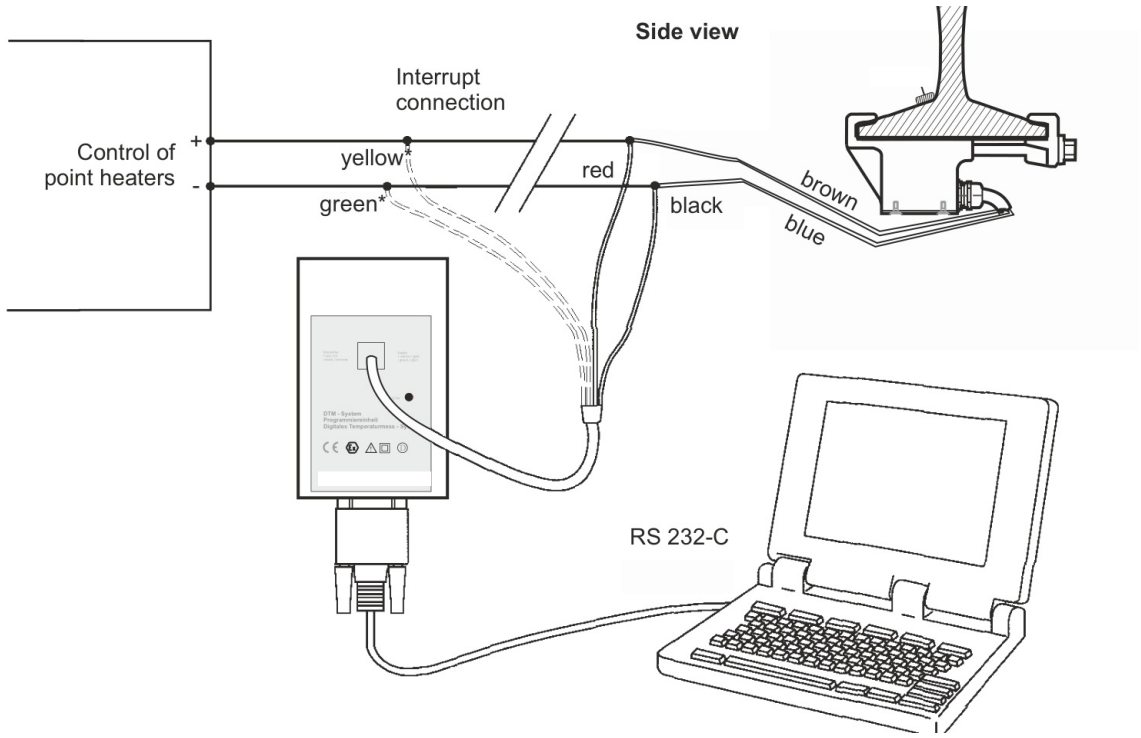

Connection to the point heater control, with programming unit and PC

Attention "yellow *" and "green *" are only to be connected if the digital temperature measurement recorder is to be configured during running operation.

3.2 Load

The allowable load is dependent on the voltage of the loop supply:

RA < (UB – 9 V) / 0.021 A

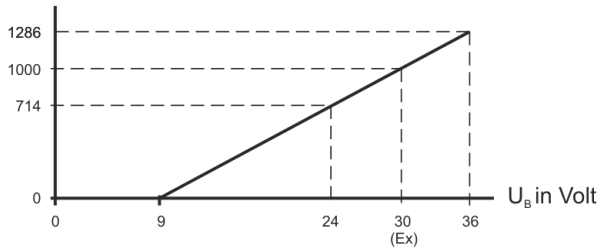

Load RA in ohm over the supply voltage UB in volt

4 Configuration

The measuring range is configurable and is set to -30...+60 °C ex works. Whoever needs another one states it with the order or sets it with the configuration set.

Configuration set with the DTM-Control software. Without it the measuring range cannot be changed; the link runs over RS 232-C to the PC.

For configuration during operation the yellow and green cores are connected (see 3.1).

5 Technical data

5.1 Input and output

Feature	Value
Sensing element	Pt100, 4-wire, class A
Range ex works	-30 ... +60 °C, configurable (1)
Resolution	0.1 °C
Output	4 ... 20 mA, invertible to 20 ... 4 mA
Technique	2-wire, linear to temperature
Output limits	3.8 ... 20.5 mA to NAMUR
	3.6 ... 21.5 mA without NAMUR
Fault signal	> 21.0 mA upscale · < 3.6 mA downscale (NAMUR)
Substitute value	3.5 ... 23.0 mA, configurable
Reading update	about 2 per second

5.2 Performance

Feature	Value
Measuring error	< ±0.05 % of span
Temperature influence	< ±0.01 % of span per kelvin
Load influence	< ±0.01 % of span per 100 ohm
Supply influence	< 0.005 % of span per volt
Damping	0.5 s · 1 s ... 60 s, configurable
Load	RA < (UB – 9 V) / 0.021 A
Insulation voltage	1500 VAC, 60 s
Configuration	by PC and configuration set, DTM-Control software
Interface	RS 232-C at the programming unit
Weight	approx. 1.5 kg

5.3 Supply and environment

Feature	Value
Supply	9 ... 36 VDC
Load	RA < (UB – 9 V) / 0.021 A
Insulation voltage	1500 VAC, 60 s
Working temperature	-40 ... +85 °C
Option	-50 ... +105 °C
Storage temperature	-40 ... +85 °C, option -50 ... +105 °C
Cable	H07BQ-F, 2 × 1.5 mm², through a PG 11 gland out of the potting
Installation	below the heating rod (2)

5.4 Mechanics

Feature	Value
Housing	68 × 64 mm, fully potted
Material	x 25 CrNiSi 18.9
Colour	stainless steel, unpainted
Fastening	claw and counter claw, threaded rod M10
Strength	10.9, tightening torque 68 Nm
Rail types	S 49 · S 54 · UIC 60 · R 65
Connection	cable H07BQ-F, 2 × 1.5 mm², PG 11
Weight	approx. 1.5 kg

(1) The measuring range is configurable and is set to -30…+60 °C ex works. Whoever needs another one states it with the order or sets it with the configuration set.

(2) The sensor has to be mounted below the heating rod — otherwise it measures the heating instead of the rail.

6 Maintenance

Check at regular intervals, especially before the heating season: tight fit of claw and nut (tightening torque see 5.4), position below the heating rod, condition of housing, gland and cable. Replace a damaged instrument; the potted housing cannot be opened.

7 Dimensions

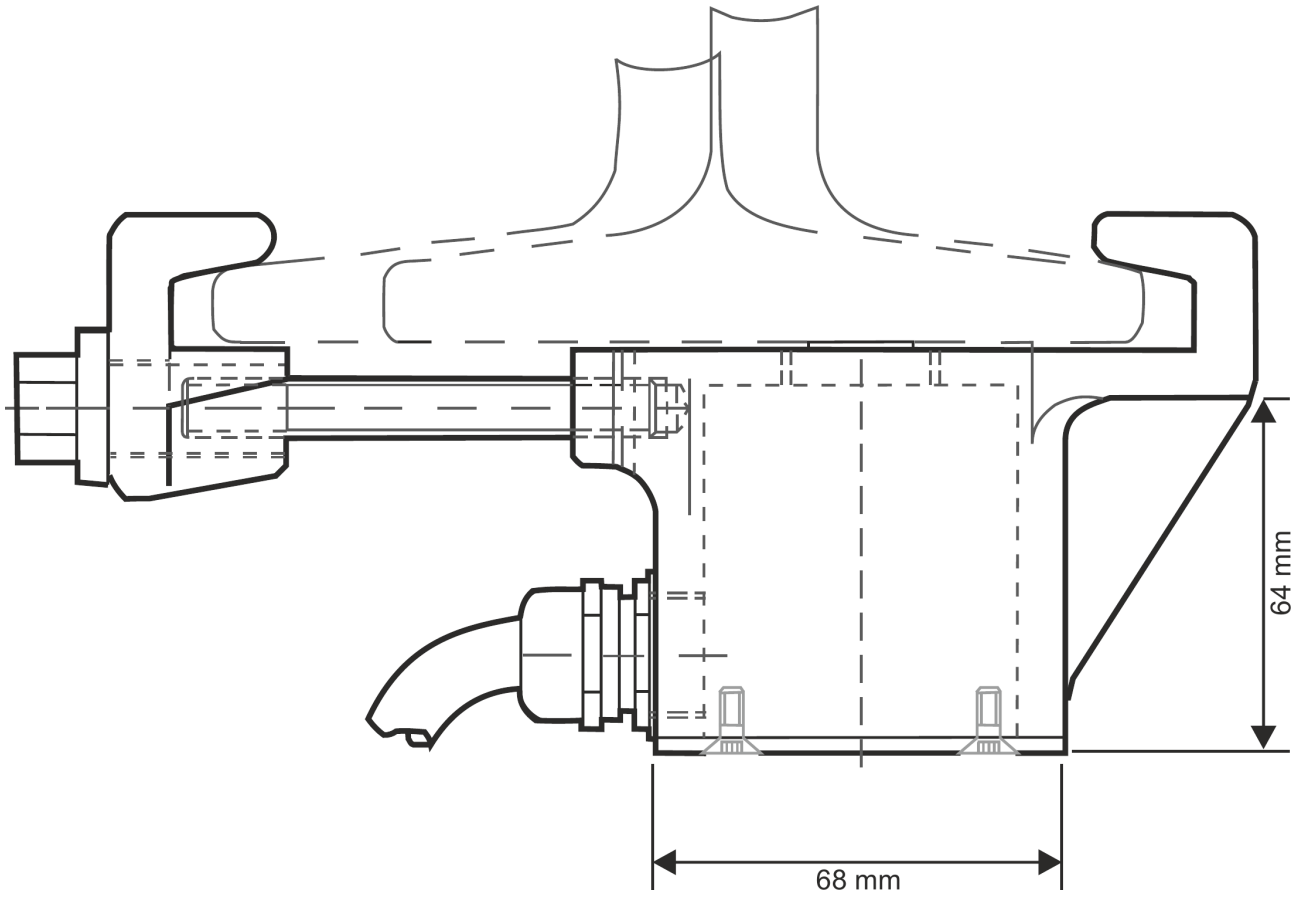

Dimensions in mm.