OCTOGON

MANUAL

TKMD

RESISTANCE THERMOMETER, HEAD B, GL

Mounting and installation manual

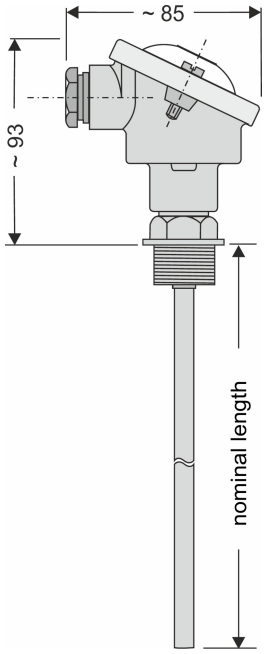

Document	Version	Date	Applies to
Mounting and installation manual	V00x	11/2026	TKMD, all versions according to the datasheet

octogon GmbH · Roseggerstrasse 16 · 8700 Leoben · Austria · office@octogon.org

Contents

1 About this manual 2
2 Safety 2
3 Device 3
3.1 Description 3
3.2 Sensing element 3
3.3 Sheath and length 3
3.4 Terminal head 3
3.5 Temperature and response 3
3.6 Conformity and accessories 4
3.7 Dimensions 4
4 Mounting 5
5 Electrical connection 5
5.1 Connection according to the datasheet 5
5.2 Installation notes 5
6 Commissioning and testing 5
6.1 Commissioning 5
6.2 Troubleshooting 5
7 Maintenance, cleaning and disposal 6

1 About this manual

This manual describes mounting, electrical connection, testing and maintenance of the TKMD (RESISTANCE THERMOMETER, HEAD B, GL). Manufacturer type: WT-MR1G.

The device data in chapter 3 and the connection in 5.1 are taken from the TKMD datasheet (TKMD Datasheet V01x EN). Ordering options are given there. The other chapters contain general instructions for resistance thermometers; they do not replace the design of the respective system.

Important Read this manual completely before mounting and commissioning and keep it for later reference.

2 Safety

– The sensor measures temperatures. It may only be used within the limits given in chapter 3: operating range of the sensing element, temperature of sheath, terminal head and accessories, and protection rating.
– Mounting, connection and commissioning only by qualified personnel familiar with this manual.
– Install and remove the sensor in pipes, vessels and plant only when they are depressurised, cooled down and drained. Sheath, process connection and fastening must be suitable for the pressure, temperature, flow and medium of the plant.
– Sheath and connection parts may be hot after operation: risk of burns.
– Do not carry or pull the sensor by its cable, do not use it as a lever or step and do not modify it.
– Do not put a damaged sensor or a damaged cable into operation.

3 Device

3.1 Description

Resistance thermometer with terminal head B in the version with GL type approval. Compared to TKMC it is shorter (max. 200 instead of 2000 mm), carries a process pressure rating, a different set of accessories and a different sheath material for the M.I. element — it is not the same product with one more mark.

3.2 Sensing element

Characteristic	Value
Sensor element	Pt100 · Pt1000 · 2× Pt100 · 2× Pt1000
Circuit	2-wire · 3-wire · 4-wire
Accuracy	class A · class B · B1/2DIN ·
	B1/3DIN · B1/10DIN
Type	standard element (S) · M.I. element (M)
Form	screw-in sensor (ES) · dip-in sensor (ET)
Insulator	metal oxide
Operating range	-200 … +450 °C

3.3 Sheath and length

Characteristic	Value
Material	1.4571 (316Ti) for standard element
	1.4401 (316) for M.I. element
Ø standard element	ES 3 · 4 · 5 · 6 · 7 · 8 · 9 · 10 · 11 · 15 mm
	ET 5 · 6 · 7 · 8 · 9 · 10 · 11 · 15 mm
Ø M.I. element	ES 3 · 6 mm · ET 6 mm
Ø and wall	3×0.4 · 4×0.5 · 5×0.5 · 6×0.5 · 6×1 ·
	7×0.5 · 7×1 · 8×1 · 9×1 · 10×1 · 11×2 · 15×2 mm
Fitting, nominal length	50 · 100 · 160 · 200 mm · option on request
Maximum length	200 mm
Process pressure	max. PN16
Process connection	1/4″ · 3/8″ · 1/2″ · 1″ ·
	1/4NPT · 3/8NPT · 1/2NPT
Bend radius	min. 5 × Ø sheath (M.I. element)

3.4 Terminal head

Characteristic	Value
Material	aluminium
Process connection	M24x1.5
Cable connection	M20x1.5
Connection	ceramic block with terminal posts
Protection	IP 54
Insulation resistance	test voltage 500 VDC

3.5 Temperature and response

Characteristic	Value
Sensor	-200 … +450 °C
Sheath 1.4571	up to 600 °C
Sheath 1.4401	up to 600 °C
Terminal head	up to 480 °C (1)
Compression fitting	-75 … +250 °C
Response 3×0.4 mm	t90 5 s · t50 2 s

(1) The terminal head limits the application: 480 °C at its own surroundings, not at the medium.

3.6 Conformity and accessories

Characteristic	Value
Type approval	GL TAA00002H5
Accuracy classes	Class A to B1/10DIN
Protection	IP 54 at the terminal head

Connection cable (max. 6 m) · compression fitting · sheet metal flange.

3.7 Dimensions

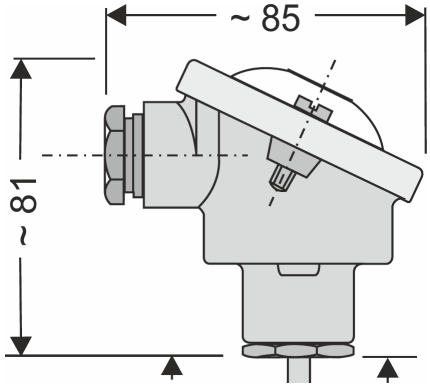

Terminal head B, dimensions in mm

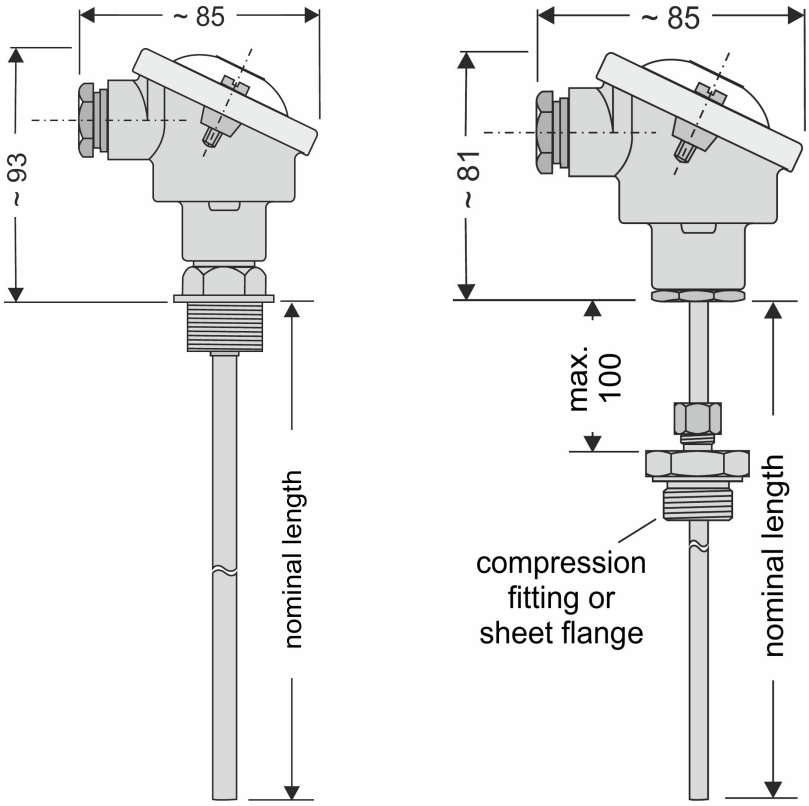

Left form screw-in sensor (ES), right form immersion sensor (ET)

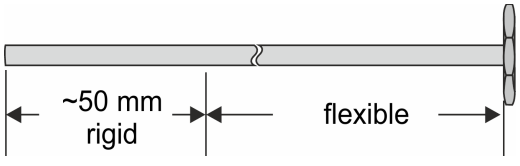

Mineral insulated element: rigid and flexible section

4 Mounting

Transport and storage

Transport and store the sensor in its packaging, dry and protected against shocks. Do not kink the sheath or the cable.

Installation point and immersion depth

The sensor measures the temperature at its tip. It must be installed so deep that the tip fully takes on the temperature to be measured; if the immersion depth is too small, heat dissipation via sheath and fastening falsifies the reading. In pipes, install it against the flow or in a pipe bend where possible.

The response times in chapter 3 apply to the sheath geometry stated there. Additional thermowells and air gaps increase them.

Fastening

Screw-in sensor (ES): screw in the process connection with a suitable seal and tighten it only at the spanner flats of the process connection; do not turn it by the terminal head. Immersion sensor (ET): fasten it with the accessories according to 3.6.

For the mineral insulated element, the rigid and the flexible section are shown in 3.7; keep to the bend radius according to 3.3.

Temperature of cable and terminal head

The surroundings of the terminal head must not become hotter than stated in 3.5. With hot surfaces and media, place the head at a sufficient distance and protect it against radiant heat.

5 Electrical connection

5.1 Connection according to the datasheet

Terminal head B holds a ceramic block with terminal posts; the cable enters through the M20x1.5 gland.

Sheath of the mineral insulated element: the first approx. 50 mm from the terminal head are rigid, the rest is flexible. The bend radius is limited to at least five times the sheath diameter.

5.2 Installation notes

– Connect only with the evaluation electronics switched off.
– Lead the cable through the cable gland and connect it to the terminal posts of the ceramic block. Use a cable gland that suits the cable diameter and close it and the cover tightly so that the protection rating is maintained.
– Route measuring cables separately from power and control cables. Connect a shield according to the specifications of the evaluation electronics.
– In the 2-wire circuit the resistance of the leads is added to the measurement as an error. For accurate measurements and long cables, use the 3- or 4-wire circuit.
– Set the sensing element (Pt100 or Pt1000) and the circuit on the evaluation electronics.
– Check the assignment of the wires with an ohmmeter before connecting: wires leading to the same end of the sensing element only show the lead resistance between them.
– With double elements (2×), connect both measuring circuits separately and insulate unused wires.

6 Commissioning and testing

6.1 Commissioning

Check mounting and connection according to chapters 4 and 5, then switch on the evaluation electronics and check that a plausible reading is displayed (e.g. the ambient temperature before the plant heats up).

6.2 Troubleshooting

Disconnect the sensor from the evaluation electronics and check:

– Measure the resistance of the sensing element between the wires and compare it with the basic value of the sensing element (Pt100 or Pt1000) at the prevailing temperature.

– Insulation resistance between all wires (connected together) and sheath or shield, with no more than the test voltage according to the datasheet (test voltage 500 VDC).

Note If a measuring circuit is interrupted or the reading deviates significantly, do not continue to use the sensor and contact octogon technical customer service.

7 Maintenance, cleaning and disposal

– The sensor is maintenance-free. Check regularly: cable gland, cover and seal of the terminal head for damage, tight fit of the fastening, deposits on the sheath.

– Check the reading against a reference thermometer at intervals appropriate to the application, especially after operation close to the upper limit of the operating range.

– Clean with a damp cloth and a cleaning agent that does not attack the materials according to chapter 3.

– Dispose of the sensor as electrical and metal scrap in accordance with the applicable local regulations.