OCTOGON

MANUAL

TFMB

SURFACE SENSOR RADIO, MAGNET

Operating manual



Document	Version	Date	Applies to
Operating manual	V00x	11/2026	TFMB, Pt100 4-wire, radio 868 MHz, clamping magnet

This operating manual describes use, safety, mounting, supply and connection, operation, technical data and dimensions of the TFMB radio surface temperature sensor with clamping magnet.

octogon GmbH · Roseggerstrasse 16 · 8700 Leoben · Austria · office@octogon.org

Contents

1 General ... 2
1.1 Use ... 2
1.2 Safety instructions ... 2
1.3 Device ... 2
2 Mounting ... 3
3 Supply and electrical connection ... 3
3.1 Versions ... 3
3.2 Assignment M12x1, 4-pole ... 3
3.3 Battery and charging ... 3
4 Operation ... 4
4.1 Switching on and off ... 4
4.2 Radio link ... 4
4.3 Reading out and remote configuration ... 4
5 Technical data ... 4
5.1 Input and output ... 4
5.2 Performance ... 4
5.3 Supply and environment ... 5
5.4 Mechanics ... 5
6 Commissioning ... 5
7 Maintenance ... 5
8 Dimensions ... 6

1 General

1.1 Use

Surface temperature sensor seated on a clamping magnet that sends its reading by radio — attached, not installed, and without a cable.

For use in the whole range of industrial applications where the distance between measuring point and evaluation has to be bridged by radio. Use the sensor only for this purpose and only within the values given in chapter 5.

1.2 Safety instructions

Warning Mounting, connection and commissioning only by qualified staff. The measuring face may be hot, and so may the surfaces of plant parts. Keep to the temperatures given in chapter 5. The clamping magnet strongly attracts iron parts. Charge the battery only with the supply given in 3.3 and only within the temperature range for charging; do not charge or reuse a damaged battery. Do not put a damaged instrument into operation. Non-compliance may cause injuries and damage.

1.3 Device

Feature	Version
Design	surface temperature sensor with clamping magnet, radio transceiver and battery
Sensing element	Pt100, 4-wire, class A
Output	radio signal, SRD band 868 MHz
Antenna	internal or external (as ordered)
Electrical connection	none or M12x1, 4-pole (as ordered, see 3.1)
Manufacturer type	METS-WRM

2 Mounting

The sensor is not installed but placed on a magnetic surface with its clamping magnet (holding force 66 N). The spring-loaded measuring face (Ø 6 mm) must rest on the surface. Any mounting position is possible.

The ambient temperature is not the medium temperature: the measuring face is rated up to +400 °C, the electronics in the head only up to +60 °C.

Place the sensor so that there is as free a line of sight as possible between head and receiver. The range applies in free line of sight; walls, metal and plant structures shorten it. The magnet puts the sensor on metal — that is the unfavourable case.

3 Supply and electrical connection

3.1 Versions

The sensor sends its readings by radio; there is no signal cable. The plug is used only for supply and charging.

Electrical connection	Supply
none	battery; the battery is exchanged for charging
M12x1, 4-pole, without battery	permanently from 24 VDC via the plug
M12x1, 4-pole, with battery	permanently from 24 VDC, battery in parallel and charged in the device

3.2 Assignment M12x1, 4-pole

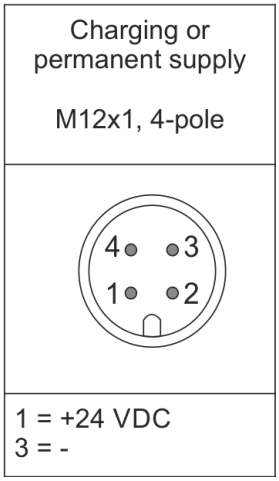

Charging or permanent supply, view on the plug pins at the device

Pin	Function
1	+24 VDC
3	–

3.3 Battery and charging

Feature	Value
Battery	lithium-ion battery pack, 3.6 V, 2600 mAh
Charging and external supply	24 VDC, max. 1 A, charging time approx. 2 hours
Charging	0 … +45 °C
Power consumption radio	14 … 24 mA (transmit) · 0.8 … 7.5 µA (sleep mode)
Power consumption Pt100 measurement	max. 7 mA (active)
Power management	optimised in the factory

The battery charges only between 0 and +45 °C while the device works up to +60 °C. Above +45 °C it can measure but not charge.

The service life depends on the measuring rate: one measurement per minute gives about six months, six per minute about 50 days.

4 Operation

4.1 Switching on and off

The sensor is switched on and off on top of the cover with a magnet. Two LEDs (red, green) under the lens on top are used for signalling.

4.2 Radio link

Feature	Value
Frequency, modulation	SRD band 868 MHz, FSK
RF output power	up to 5 dBm (approx. 3.2 mW)
Transmission rate	19.2 kb/s
Range	internal antenna 20 m · external antenna 100 m, each in free line of sight
External antenna	SMA plug, panel socket (option)

4.3 Reading out and remote configuration

The sensor is read out and configured remotely via a USB transceiver on a PC or notebook with a terminal program. The USB transceiver is transmitter and receiver in one (SRD band 868 MHz, range 100 m in free line of sight) and is available as an accessory.

Factory setting: Pt100, 4-wire, set range -50 … 250 °C. A customer-specific configuration must be stated with the order.

5 Technical data

5.1 Input and output

Feature	Value
Sensor	Pt100, 4-wire, class A
Maximum range	-50 … +400 °C
Pt100 module	16 bit, 0.1 °C
Measuring rate	8 measurements/s
Filter	0 … 1 s
Temperature coefficient	50 ppm/K
Radio module	up to 5 dBm (approx. 3.2 mW)
Transmission rate	19.2 kb/s
Frequency	SRD band 868 MHz, FSK

5.2 Performance

Feature	Value
Range internal	20 m in free line of sight (2)
Range external	100 m in free line of sight (2)
External antenna	SMA connector, panel socket (option)
Signalling	2 LEDs red/green under the lens
Battery	lithium-ion, 3.6 V, 2600 mAh
Life 1 measurement/min	approx. 6 months (4)
Life 6 measurements/min	approx. 50 days (4)
Charging	24 VDC, max. 1 A, approx. 2 hours
Power radio module	14 … 24 mA transmit · 0.8 … 7.5 µA sleep
Power Pt100 module	max. 7 mA active

5.3 Supply and environment

Feature	Value
Supply	battery, option 24 VDC permanent
Ambient	-20 … +60 °C (1)
Charging the battery	0 … +45 °C (3)
Medium	-50 … +400 °C
Storage	-20 … +50 °C
Humidity	max. 80 % rH at 20 °C
Weight	approx. 514 g

5.4 Mechanics

Feature	Value
Process connection	clamping magnet, holding force 66 N
Measuring face	Ø 6 mm, spring-loaded (travel 1.5 mm)
Magnet	Alnico 500
Sensor body	stainless steel 1.4571
Mounting position	any
System pressure	PN 25
Protection	at least IP 65 at the electronics
Screw cover	PA6.6 GF30
Lens	PMMA

Feature	Value
Conformity	ETSI directive, EMC directive 2014/30/EU

(1) The ambient temperature is not the medium temperature: the measuring face is rated up to +400 °C, the electronics in the head only up to +60 °C.

(2) The range applies in free line of sight; walls, metal and plant structures shorten it. The magnet puts the sensor on metal — that is the unfavourable case.

(3) The battery charges only between 0 and +45 °C while the device works up to +60 °C. Above +45 °C it can measure but not charge.

(4) The service life depends on the measuring rate: one measurement per minute gives about six months, six per minute about 50 days.

6 Commissioning

Charge the battery (see 3.3) or connect the permanent supply (see 3.2), switch the sensor on with the magnet, place it (see chapter 2) and check on the PC with the USB transceiver that readings arrive. If no readings arrive: check that the sensor is switched on and the battery is charged, and that the range is sufficient for the existing line of sight (see chapter 2).

7 Maintenance

Charge or exchange the battery in good time; the service life depends on the measuring rate (see 3.3). Check at regular intervals: clean contact of magnet and measuring face, condition of lens, cover, plug and antenna. Replace a damaged instrument.

8 Dimensions

Accumulator to replace	With plug M12x1 and internal antenna	With plug M12x1 and external antenna	
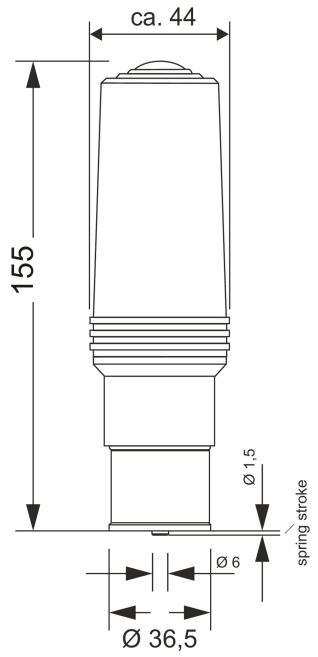	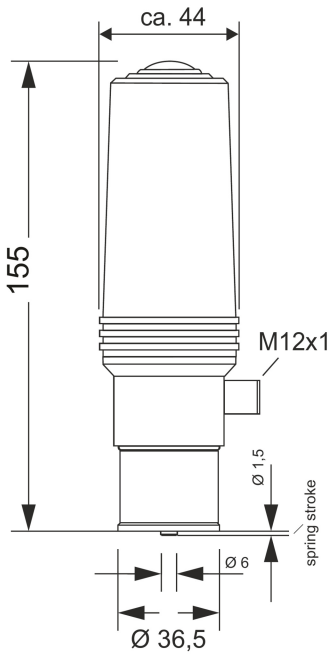	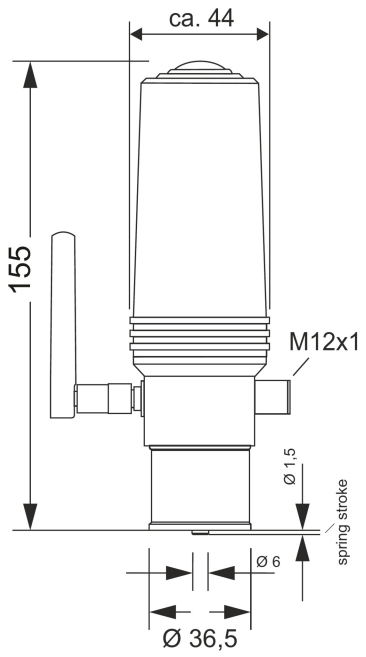	

Dimensions in mm.