OCTOGON

MANUAL

TEMA

SCREW-IN TEMPERATURE SENSOR TYPE K

Operating manual



Document	Version	Date	Applies to
Operating manual	V00x	11/2026	TEMA, thermocouple type K, output 4 ... 20 mA with HART

This operating manual describes use, safety, mounting, electrical connection, operation and configuration, technical data and dimensions of the TEMA screw-in temperature sensor.

Contents

1 General ... 2
1.1 Use ... 2
1.2 Safety instructions ... 2
1.3 Device ... 2
2 Mounting ... 3
3 Electrical connection ... 3
3.1 Plugs and limit contacts ... 3
3.2 Assignment plug M12x1, 8-pole ... 3
3.3 Supply and load ... 3
3.4 Limit contacts ... 4
4 Operation and configuration ... 4
4.1 Factory setting ... 4
4.2 Display ... 4
4.3 Setting with the keys ... 4
4.4 Setting via HART ... 4
5 Technical data ... 5
5.1 Input and output ... 5
5.2 Performance ... 5
5.3 Supply and environment ... 5
5.4 Mechanics ... 5
6 Commissioning and troubleshooting ... 6
7 Maintenance ... 6
8 Dimensions ... 6

1 General

1.1 Use

Screw-in temperature sensor with a type K thermocouple, a HART-capable transmitter, a display and two limit contacts.

For use in heating, ventilating and air-conditioning installations and the whole range of industrial applications. Use the sensor only for this purpose and only within the values given in chapter 5.

1.2 Safety instructions

Warning Mounting, connection and configuration only by qualified staff. Depressurise the installation and let it cool down before screwing the sensor in or out; sheath and medium may be hot. Keep to the system pressure and the temperatures given in chapter 5. Switch off the supply before connecting. Do not put a damaged instrument into operation. Non-compliance may cause injuries and damage.

1.3 Device

Feature	Version
Design	screw-in temperature sensor with transmitter, display and limit contacts, boards potted
Sensing element	thermocouple type K (NiCr-Ni), class 1
Output	4 ... 20 mA with HART, 2-wire current loop
Limit contacts	up to 2, electronic, PNP or NPN (as ordered)
Electrical connection	plug as ordered, see 3.1
Manufacturer type	METS-TS

2 Mounting

The sensor is screwed into the installation by its process connection (thread see 5.4). Use the hexagon, width across flats 27, for screwing in, not the head. Any mounting position is possible; the system pressure must not exceed PN 25.

So that the display can be read in any mounting position, the head of the display can be rotated by approx. 330° and the representation can be mirror-inverted by 180° (see 4.2).

The ambient temperature is not the medium temperature: the medium may be hotter than the electronics in the head.

3 Electrical connection

3.1 Plugs and limit contacts

The sensor is supplied with one of the following plugs. The number of limit contacts that can be connected depends on the plug:

Plug	1 limit value	2 limit values
M12x1, 4-pole	yes	–
M12x1, 5-pole	yes	yes
M12x1, 8-pole	yes	yes
Bayonet (DIN), 4-pole	yes	–
Deutsch DT04, 4-pole	yes	–
Deutsch DT04, 3-pole	–	–
Super Seal 1.5, 3-pole	–	–
Valve plug, 4-pole	yes	–
MIL, 6-pole	yes	yes

3.2 Assignment plug M12x1, 8-pole

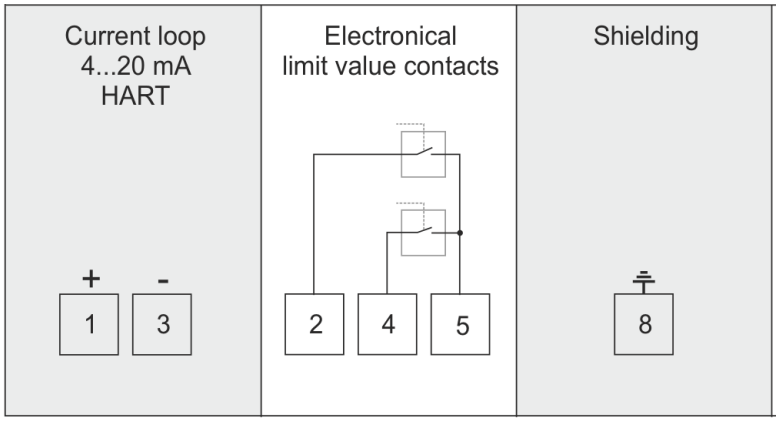

Assignment plug M12x1, 8-pole (example)

Pin	Function
1	current loop 4 ... 20 mA, HART, +
3	current loop 4 ... 20 mA, HART, –
2, 4, 5	electronic limit value contacts
8	shielding

The assignment of the other plugs is not given in the documents available; please ask octogon.

3.3 Supply and load

The sensor is supplied from the HART current loop (12 ... 40 VDC). The allowable load depends on the supply voltage UB:

R = (UB – 12 V) / 22 mA

Reverse battery protection: available (no function, no damage).

3.4 Limit contacts

Feature	Value
Type	electronic, 2× PNP or NPN (30 VDC, 200 mA); option 2× PNP or NPN (30 VDC, 1000 mA)
Voltage across	< 1 V
Indication	1 LED red for each limit value
Galvanic insulation	switching outputs are separated from the measuring amplifier

4 Operation and configuration

Settings are made with the three keys on the display or by software via HART. Features and operation are according to VDMA 24574-1 up to 24574-4.

4.1 Factory setting

Unless otherwise specified in the order, the sensor is supplied with factory setting: measuring range = indicating range, limit values 40 % / 80 %. With a customised configuration, all settings possible according to the technical data can be selected; for values not specified the factory settings are used.

4.2 Display

Feature	Value
Display	7 segment, 8.5 mm, red, 4 digits, mirror-inverted 180° possible
Head of display	rotatable approx. 330°
Indication	measuring value, unit, control menu
Memory	minimum and maximum values
Decimal point	automatically or manually, depending on measuring range and unit
Representation	xxxx · xxx.x · xx.xx · x.xxx
Resolution	-9999 ... 9999 digit
Error of measurement	±0.2 % of range, ±1 digit
Temperature drift	100 ppm/K

4.3 Setting with the keys

The three keys on the display are used to set:

Area	Programmable features
Measuring amplifier	measuring range start, measuring range end
Display	range of indication, time of indication, decimal point, units, stabilisation of zero point, locking of programming, calibration points, TAG number
Limit contacts	limit values 1 and 2, hysteresis 1 and 2, delay times 1 and 2 (0.0 ... 999.9 s), failsafe function

Switch point and hysteresis can be set to any value within the measuring range.

4.4 Setting via HART

Via a HART interface with USB connection to a PC or a hand-held HART communicator, the sensor can be put into operation and configured with a graphical, menu-driven program; the program is also used for signal analysis, data backup and documentation. HART interface and software are available as accessories on request. Settings:

Setting	Setting
adjustment of output current	simulation of output current
filter function	limits of measuring range
linear output signal	HART address
HART TAG number	2-point calibration
6-point calibration (linearisation)	

Please note When communicating via a HART modem, take the communication resistance of 250 Ω into account.

5 Technical data

5.1 Input and output

Feature	Value
Thermocouple	type K, NiCr-Ni
Measuring range	-50 ... +200 °C, minimum span 50 °C
Tolerance	±1.5 °C to DIN EN 60584-2 class 1
Current signal	4 ... 20 mA with superimposed HART signal
	2-wire current loop
Current range	3.8 ... 20.5 mA
Fault signal	3.6 mA short circuit · 21 mA break

5.2 Performance

Feature	Value
Accuracy	0.3 % of span
Resolution	16 bit
Filter setting	0 ... 99 s
Transfer behaviour	linear with temperature
Measuring rate	10 measurements/s
Switch-on delay	< 5 s · response time 20 ms
Setting	keys at the display or HART
Limit contacts	2× PNP or NPN, 30 VDC, 200 mA
	option 1000 mA

5.3 Supply and environment

Feature	Value
Supply	12 ... 40 VDC from the current loop
Reverse protection	yes
Ambient	-20 ... +80 °C (1)
Medium	-50 ... +200 °C
Storage	-40 ... +100 °C
Condensation	harmless

5.4 Mechanics

Feature	Value
Process connection	1/4″ · 3/8″ · 1/2″ · 3/4″ · 1″ ·
	1/4NPT · 3/8NPT · 1/2NPT
Neck tube	100 mm (option)
Sheath	1.4571, standard Ø 6 × 0.5 mm
Housing	PBT GF30
Mounting position	any
System pressure	PN 25
Protection	at least IP 65, boards potted
Display top	polycarbonate

(1) The ambient temperature is not the medium temperature: the medium may be hotter than the electronics in the head.

6 Commissioning and troubleshooting

After the supply is switched on, the measuring signal is available within less than 5 s. A fault is signalled by the output current:

Output current	Meaning
3.6 mA	sensor short circuit, underflow
21 mA	sensor break, sensor open circuit, overflow
no current	no supply or reverse polarity: check supply and assignment (see 3.2 and 3.3)

7 Maintenance

Check at regular intervals: tight and leak-free fit at the process connection, condition of housing, display top, plug and cable. Replace a damaged instrument; the boards are potted and cannot be repaired.

8 Dimensions

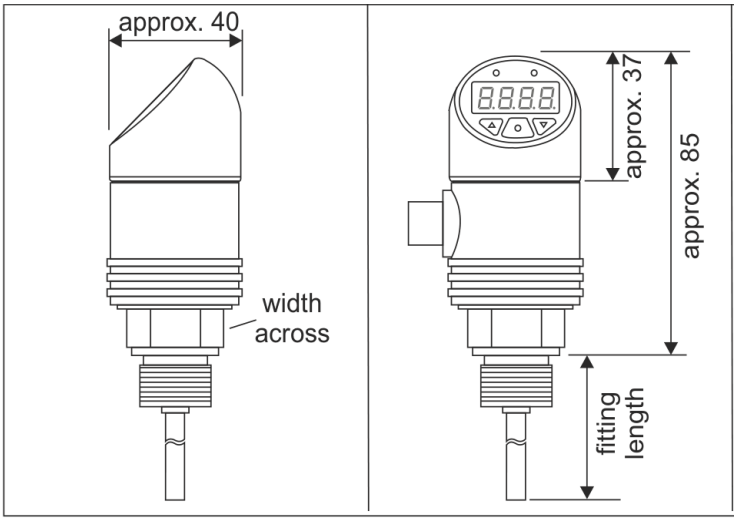

Dimensions in mm. Fitting length as ordered (50 ... 1000 mm or other).