TEMPERATURE SENSOR WITH LED DISPLAY



- RANGES –200 TO +400 °C
- ACCURACY ± 1.0 °C
- IO-LINK · RS485 · 4 … 20 MA
- LED DISPLAY, HEAD TURNS 330°
- STAINLESS STEEL · IP67 · M12

IP67 · Stainless Steel AISI 304 · 1.4301 · M12 · IO-Link · RS485 · Analog-signal · Display

VERSIONS

Feature	Versions
Measuring range, standard	–20 … +80 °C · 0 … +100 °C
Measuring range, high / low temperature	–50 … +200 °C · –50 … +400 °C · –100 … +100 °C · –200 … +100 °C – with 50 mm cooling neck
Output	two switching outputs / IO-Link (4-pin) · one switching output / IO-Link + analogue (4-pin) · two switching outputs + analogue (5-pin) · RS485 (4-pin)
Thread	G1/4, G1/2, M20 × 1.5, M27 × 2 male (with ED seal) · R1/4, R1/2, NPT1/4 male
Sanitary clamp	OD 50.5 mm
Probe	Ø 6 or Ø 8 mm · length L selectable in mm (including thread)

Measuring range, mounting thread and probe length also to customer specification. With thermowell: choose thread G1/4; thermowell Ø 10 mm for probe Ø 6 mm, Ø 12 mm for probe Ø 8 mm.

OVERVIEW

Temperature sensor with bright LED display, two switching outputs and analogue, IO-Link or RS485 output – in ranges from –200 to +400 °C.

A platinum resistance element measures the temperature; the electronics convert it into a standard signal and display it. Housing and wetted parts are stainless steel 304; the display head rotates by 330° and stays readable in any mounting position. Switching points and outputs are set with three keys and a menu. If the measuring range reaches –50 °C or below, or +150 °C or above, a 50 mm cooling neck sits between process connection and housing. Connection by thread or sanitary clamp.

–200 ... +400 °C
ranges per version

± 1.0 °C
accuracy

IO-Link
or RS485

IP67
protection class

MEASUREMENT

- platinum resistance thermometer
- ranges from –200 to +400 °C
- accuracy ± 1.0 °C
- annual drift ≤ ± 0.5 °C

OUTPUTS

- two switching outputs PNP / NPN
- analogue output 4 ... 20 mA
- IO-Link or RS485
- response time 0.01 ... 2 s

TECHNICAL DATA

MEASUREMENT AND PRECISION

Measuring principle	platinum resistance thermometer
Measuring range	–200 … +400 °C, sub-ranges per version
Accuracy	± 1.0 °C
Stability (annual drift)	≤ ± 0.5 °C
Analogue output accuracy	≤ ± 0.5 % of span
Linearity	≤ 0.5 % of span

TEMPERATURES

Medium temperature	–20 … +100 °C (standard) · –200 … +400 °C (high / low temperature)
Ambient temperature	–20 … +80 °C
Storage temperature	–30 … +80 °C

MECHANICAL PROPERTIES

Display head	engineering plastic, flame class UL-94 V-0, rotatable 330°
Housing	stainless steel 304
Wetted parts	stainless steel 304
Probe	Ø 6 or Ø 8 mm
Protection class	IP67
Electrical connection	M12 × 1 connector

ELECTRICAL PROPERTIES

Supply voltage	12 … 30 V DC
No-load current	≤ 30 mA at 24 V DC
Protection	reverse polarity, overload, short circuit

OUTPUTS

Switching output	PNP / NPN switchable, NO / NC selectable
Switching load	< 200 mA / 24 V DC
Response time	0.01 … 2 s
Analogue output	4 … 20 mA
Load	≤ 500 Ω
Communication	IO-Link / RS485

DISPLAY AND OPERATION

Display	4-digit LED, red, 12 mm high
Display range	–1999 … 9999
Indicators	switching state SP1 / SP2, unit °C / °F
Operation	three keys with menu

PIN ASSIGNMENT M12 × 1 – SWITCHING AND ANALOGUE OUTPUTS

Pin · wire	two switching outputs + analogue (5-pin)	one switching output / IO-Link + analogue (4-pin)
1 · BN brown	supply +	supply +
3 · BU blue	supply –	supply –
4 · BK black	OUT1: SP1 PNP (default) / NPN	OUT1: SP1 PNP (default) / NPN · IO-Link
2 · WH white	OUT2: SP2 PNP (default) / NPN	OUT2: analogue 4 … 20 mA
5 · GY grey	OUT3: analogue 4 … 20 mA	–

PIN ASSIGNMENT M12 × 1 – TWO SWITCHING OUTPUTS / IO-LINK · RS485

Pin · wire	two switching outputs / IO-Link (4-pin)	RS485 (4-pin)
1 · BN brown	supply +	supply +
3 · BU blue	supply –	supply –
4 · BK black	OUT1: SP1 PNP (default) / NPN · IO-Link	RS485 B
2 · WH white	OUT2: SP2 PNP (default) / NPN	RS485 A

DIMENSIONS (mm)

Standard version, threaded: male thread with ED seal, without ED seal, side view

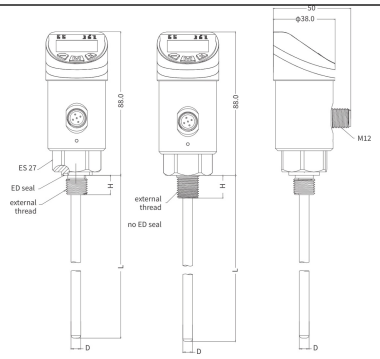

High / low temperature version, threaded, with 50 mm cooling neck (measuring range down to –50 °C or below, or from +150 °C)

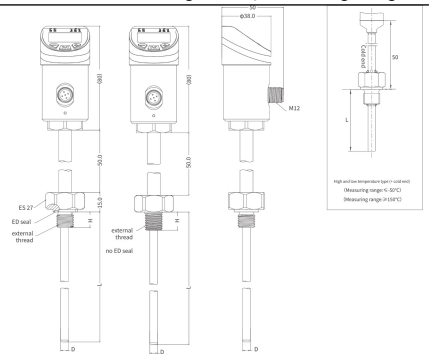

Sanitary clamp (OD 50.5 mm): standard version left, high / low temperature version right

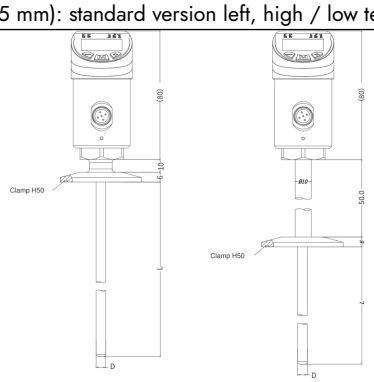

	Thread length H	ED seal
G1/4 · G1/2 · M20 × 1.5 male	12	yes
M27 × 2 male	14	yes
R1/4 · R1/2 · NPT1/4 male	14	no

Dimensions in mm. L = probe length including thread (selectable), D = probe diameter Ø 6 or Ø 8 mm, H = thread length, ES = width across flats.

COMPLIANCE AND CERTIFICATION

Protection Rating	IP67