OCTOGON

MANUAL

TBMC

M.I. RESISTANCE THERMOMETER

Mounting and installation manual

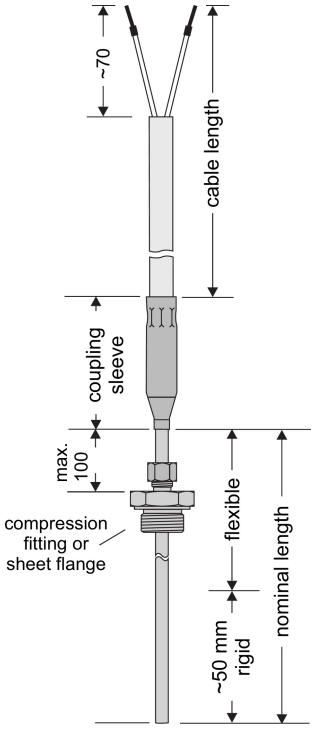

Document	Version	Date	Applies to
Mounting and installation manual	V00x	11/2026	TBMC, all versions according to the datasheet

octogon GmbH · Roseggerstrasse 16 · 8700 Leoben · Austria · office@octogon.org

Contents

1 About this manual 2
2 Safety 2
3 Device 3
3.1 Description 3
3.2 Sensing element 3
3.3 Sheath and length 3
3.4 Connecting cable 3
3.5 Temperature and response 3
3.6 Conformity and accessories 4
3.7 Dimensions 4
4 Mounting 5
5 Electrical connection 5
5.1 Connection according to the datasheet 5
5.2 Installation notes 5
6 Commissioning and testing 5
6.1 Commissioning 5
6.2 Troubleshooting 5
7 Maintenance, cleaning and disposal 6

1 About this manual

This manual describes mounting, electrical connection, testing and maintenance of the TBMC (M.I. RESISTANCE THERMOMETER). Manufacturer type: WT-MK1.

The device data in chapter 3 and the connection in 5.1 are taken from the TBMC datasheet (TBMC Datasheet V01x EN). Ordering options are given there. The other chapters contain general instructions for resistance thermometers; they do not replace the design of the respective system.

Important Read this manual completely before mounting and commissioning and keep it for later reference.

2 Safety

– The sensor measures temperatures. It may only be used within the limits given in chapter 3: operating range of the sensing element, temperature of sheath, cable and accessories, and protection rating.
– Mounting, connection and commissioning only by qualified personnel familiar with this manual.
– Install and remove the sensor in pipes, vessels and plant only when they are depressurised, cooled down and drained. Sheath, process connection and fastening must be suitable for the pressure, temperature, flow and medium of the plant.
– Sheath and connection parts may be hot after operation: risk of burns.
– Do not carry or pull the sensor by its cable, do not use it as a lever or step and do not modify it.
– Do not put a damaged sensor or a damaged cable into operation.

3 Device

3.1 Description

Mineral insulated resistance thermometer with a flexible sheath and a fixed connecting cable. The operating range is set by the cable: PVC ends at 70 °C.

3.2 Sensing element

Characteristic	Value
Sensor element	Pt100 · Pt1000 · 2× Pt100 · 2× Pt1000
Circuit	2-wire · 3-wire · 4-wire
Accuracy	class A · class B · B1/2DIN ·
	B1/3DIN · B1/10DIN
Operating range sensor	-200 … +450 °C
Insulator	metal oxide

3.3 Sheath and length

Characteristic	Value
Material	1.4401 (316)
Connecting sleeve	1.4571 (316Ti)
Ø sheath	3 · 4.5 · 6 mm
Wall	Ø 3: 0.25 · Ø 4.5: 0.38 · Ø 6: 0.51 mm
Nominal length	standard 100 mm · option on request
Maximum length	2000 mm
Bend radius	min. 5 × Ø sheath
Connection	open ends 70 mm, wire end ferrule
	option without cable, 20 mm stripped
Sleeve to cable	hexagonal crimp · option ring crimp

3.4 Connecting cable

Characteristic	Value
Connecting cable	PVC-PVC · PTFE-silicone · PTFE-PTFE ·
	PTFE-braided screen-PTFE ·
	glass silk-glass silk-braided screen
Cable length	standard 2 m · option on request
Protection	IP 65 (up to 250 °C) (1)
Insulation resistance	test voltage 500 VDC

3.5 Temperature and response

Characteristic	Value
Sensor	-200 … +450 °C
Sheath 1.4401	up to 600 °C
Compression fitting	-75 … +250 °C
Response 6×0.5 mm	t90 30.9 s · t50 12 s
Response 6×1 mm	t90 22.1 s · t50 7.6 s
Cable PVC	-5 … +70 °C
Cable silicone	-45 … +180 °C
Cable PTFE	-75 … +205 °C
Cable glass silk	-60 … +550 °C

(1) IP 65 does not apply to the braided-screen version.

(2) Two 4-wire sensors are available with the PTFE-silicone cable only.

3.6 Conformity and accessories

Characteristic	Value
Accuracy classes	Class A to B1/10DIN
Type approval	None. The GL version is a product of its own — data sheet TBMD
Protection	IP 65 up to 250 °C, not for the braided-screen version

Accessories: compression fitting and sheet metal flange.

3.7 Dimensions

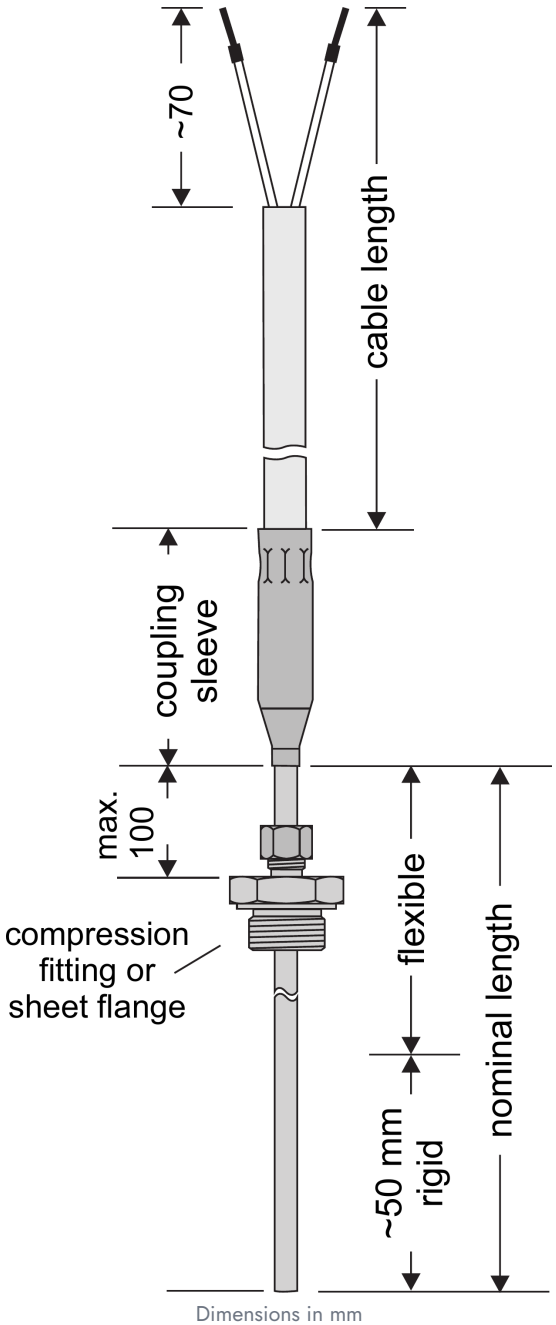

Dimensions in mm

4 Mounting

Transport and storage

Transport and store the sensor in its packaging, dry and protected against shocks. Do not kink the sheath or the cable.

Installation point and immersion depth

The sensor measures the temperature at its tip. It must be installed so deep that the tip fully takes on the temperature to be measured; if the immersion depth is too small, heat dissipation via sheath and fastening falsifies the reading. In pipes, install it against the flow or in a pipe bend where possible.

The response times in chapter 3 apply to the sheath geometry stated there. Additional thermowells and air gaps increase them.

Fastening

The sheath is flexible and can be adapted to the installation point. Bend radius according to the datasheet: min. 5 × Ø sheath. Do not bend the section marked as rigid in the drawing and do not bend the same point back and forth repeatedly. Fasten it with the accessories according to 3.6.

Temperature of the cable

The operating range is also determined by the cable (3.5). Route the cable so that it does not become hotter at any point than stated for the cable material, and fasten it with strain relief.

5 Electrical connection

5.1 Connection according to the datasheet

Cable with open ends, 70 mm; the transition to the cable is a hexagonal crimp, optionally a ring crimp.

5.2 Installation notes

- Connect only with the evaluation electronics switched off.
- Protect open cable ends against moisture; the protection rating of the sensor does not apply to the open cable end.
- Route measuring cables separately from power and control cables. Connect a shield according to the specifications of the evaluation electronics.
- In the 2-wire circuit the resistance of the leads is added to the measurement as an error. For accurate measurements and long cables, use the 3- or 4-wire circuit.
- Set the sensing element (Pt100 or Pt1000) and the circuit on the evaluation electronics.
- Check the assignment of the wires with an ohmmeter before connecting: wires leading to the same end of the sensing element only show the lead resistance between them.
- With double elements (2×), connect both measuring circuits separately and insulate unused wires.

6 Commissioning and testing

6.1 Commissioning

Check mounting and connection according to chapters 4 and 5, then switch on the evaluation electronics and check that a plausible reading is displayed (e.g. the ambient temperature before the plant heats up).

6.2 Troubleshooting

Disconnect the sensor from the evaluation electronics and check:

- Measure the resistance of the sensing element between the wires and compare it with the basic value of the sensing element (Pt100 or Pt1000) at the prevailing temperature.
- Insulation resistance between all wires (connected together) and sheath or shield, with no more than the test voltage according to the datasheet (test voltage 500 VDC).

Note If a measuring circuit is interrupted or the reading deviates significantly, do not continue to use the sensor and contact octogon technical customer service.

7 Maintenance, cleaning and disposal

– The sensor is maintenance-free. Check regularly: cable and cable transition for damage, tight fit of the fastening, deposits on the sheath.
– Check the reading against a reference thermometer at intervals appropriate to the application, especially after operation close to the upper limit of the operating range.
– Clean with a damp cloth and a cleaning agent that does not attack the materials according to chapter 3.
– Dispose of the sensor as electrical and metal scrap in accordance with the applicable local regulations.