OCTOGON

MANUAL

QZKD

GEAR FLOWMETER

Installation and user manual

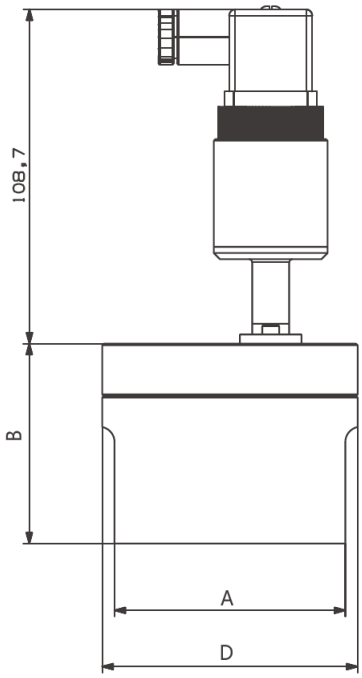

Document	Version	Date	Applies to
Installation and user manual	V00x	11/2026	QZKD, all sizes and versions

This manual describes the QZKD gear flowmeter: working principle, technical data, dimensions, installation, electrical connection and troubleshooting.

octogon GmbH · Roseggerstrasse 16 · 8700 Leoben · Austria · office@octogon.org

www.octogon.org

Contents

1 About this manual 2
1.1 Notices 2
1.2 Versions covered 2
2 Safety 2
3 Product description 3
3.1 Working principle 3
3.2 Features and applications 3
3.3 Technical data 3
3.4 Order code 3
3.5 Accessories 4
4 Dimensions 4
5 Installation 5
6 Electrical connection 6
6.1 Hersman connector 6
6.2 M12 × 1 plug 6
7 Troubleshooting 7

1 About this manual

Read this manual before installing the flowmeter and keep it available for later use. Technical data, dimensions and order codes in this manual are those of the QZKD datasheet.

1.1 Notices

Notice	Meaning
Warning	Risk of injury or of damage to property if the instruction is not followed.
Important	Pay particular attention to the following instruction.
Note	Further information.

1.2 Versions covered

Feature	Versions
Size	M2 · M2S · M4 · M6 · M10 · M15 · M25 (section 3.4)
Output	pulse (P) or 4 … 20 mA two-wire (A)
Seal	FKM or PTFE
Body	aluminium, PP, stainless steel 304 or 316
Temperature	standard or high-temperature version (T)
Outlet	Hersman connector or M12 × 1 plug (M)
Type marking on the label	FM510-…

2 Safety

Warning Risk of personal injury - overpressure danger.

– Before installing the device, read this manual and make sure that the product is suitable for your application without restriction.

– Failure to follow the operating instructions or the technical data may result in personal injury or damage to property.

– In every application, check that the materials of the product are compatible with the medium to be measured, and make sure that the medium does not damage the wetted parts of the product.

– Use the device only for the media for which it is intended; correct use is the condition for long-term stable operation.

The operator is responsible for deciding whether the flowmeter is suitable for the application. Improper installation and use void warranty claims.

3 Product description

3.1 Working principle

The QZKD is a positive displacement flowmeter. Two meshing precision gears turn inside the measuring chamber; each revolution displaces a known volume. The flowmeter counts the volume passing through and outputs it as a pulse signal or as a 4 ... 20 mA signal. It is used for precise continuous or intermittent measurement of liquid flow in pipes, also of very small quantities.

3.2 Features and applications

- Pulse or analogue output.
- Suitable for high pressure and for a wide temperature range (section 3.3).
- Measures viscous media; high accuracy and repeatability.
- Resistant to corrosion and fouling (acids and alkalis).

Typical media: resins and adhesives; hydraulic oil, lubricating oil and grease; fuel oil; inks and asphalt; liquid nitrogen, refrigerants and solvents; edible oil and fish oil; media with chemical and corrosion-resistance requirements.

3.3 Technical data

Item	Value
Measuring principle	Positive displacement — two meshing gears, each turn a known volume. The reading does not depend on the flow profile, so no straight inlet run is needed
Measuring range	Seven sizes: 50 ... 2000 mL/min, 5 ... 2000 mL/min, 0.1 ... 4, 0.15 ... 8, 0.5 ... 20, 2 ... 50 and 5 ... 150 L/min
Accuracy	± 0.5 % of full scale
Repeatability	± 0.1 % of full scale
Media	Fuels, oils, fats, adhesives, solvents, inks and insecticides · viscosity up to 10 000 Pa·s
Pulse output	Q = f × 60 / K, with f the output frequency in Hz and K the pulses per litre
Body	Aluminium, 304, 316 or PP
Pressure by material	PP 10 bar · aluminium 40 bar · 304 and 316 each 100, 250 or 400 bar, chosen in the order code
Seal	FKM as standard, PTFE for corrosive media
Medium temperature	-30 ... +120 °C as standard · ≤ 140 °C with order field T. Aluminium and PP are excluded from the high-temperature version
Connection	Female thread G1/4 ... G1 · two tapped holes in the base, 2 × M5, M6 or M8 by size
Supply voltage	16 ... 30 Vdc
Output A	4 ... 20 mA, two-wire — the meter sits in the supply loop
Output P	Pulse, three-wire on the M12 outlet: brown supply +, black signal, blue supply –
Outlet Hersman	Rectangular "Hersman" connector, factory default
Outlet M12	M12 × 1, four pins, order field M
Display	None — the meter has no display and no keys

3.4 Order code

Field	Code	Meaning
1 Series	QZKD	QZKD gear flowmeter
2 Size	M2 · M2S	50 ... 2000 mL/min · 5 ... 2000 mL/min
	M4 · M6	0.1 ... 4 L/min · 0.15 ... 8 L/min
	M10 · M15	0.5 ... 20 L/min · 2 ... 50 L/min
	M25	5 ... 150 L/min
3 Output	P · A	Pulse · 4 ... 20 mA two-wire
4 Seal	F · P	FKM · PTFE
5 Body	L · P	Aluminium 40 bar · PP 10 bar
	S · S1 · S2	304 stainless at 100 · 250 · 400 bar
	S3 · S4 · S5	316 stainless at 100 · 250 · 400 bar
6 Temperature	— · T	≤ 120 °C · ≤ 140 °C, not with aluminium or PP
7 Outlet	— · M	Hersman connector · M12 × 1 plug

Example: QZKD-M2-A-F-L-—-— - size M2, 4 … 20 mA two-wire, FKM seal, aluminium body (40 bar), standard temperature, Hersman connector. The pressure rating follows from the body field.

3.5 Accessories

M12 × 1 connecting cables, 4-pin, PUR or PVC, 2 · 5 · 10 m, straight or angled, and self-wiring sockets (Pg7 / Pg9 gland), straight or angled, are available as electrical accessories. Accessories are ordered by description; please state the flowmeter order code with the enquiry.

4 Dimensions

Hersman

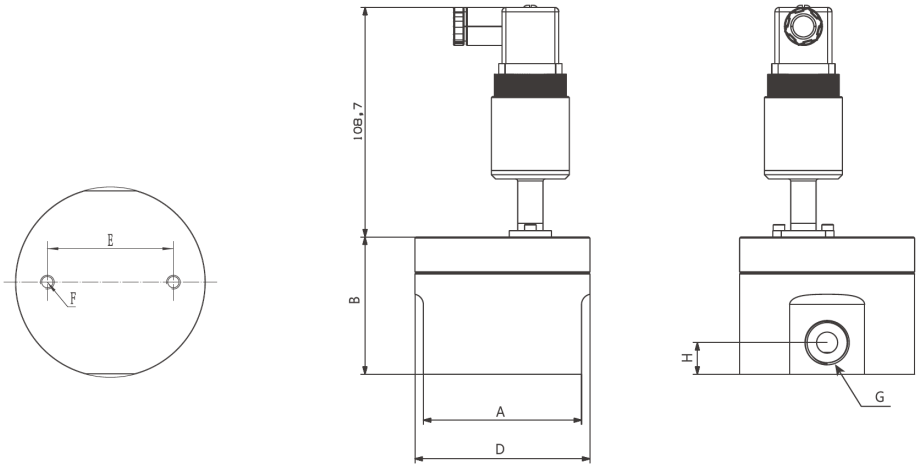

Version with Hersman connector: base with the two tapped holes, side view, port side. Overall height of the head 108.7 mm. Dimensions in mm.

Aviation plug

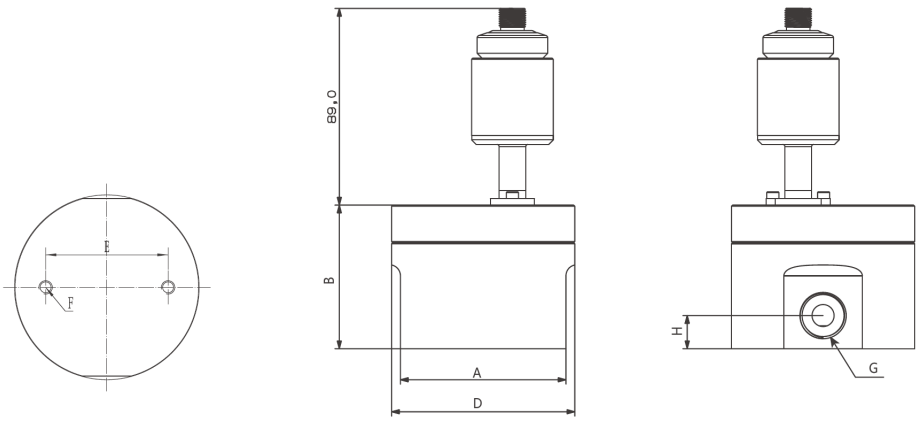

Version with M12 × 1 plug: the head is 89.0 mm high; body, base and thread as in the table.

Size	A	B	D	H	E	F	G	Range
M2	80	55	83	16	40	2×M6	G1/4	50 … 2000 mL/min
M2S	83	43	88	10	44	2×M5	G1/4	5 … 2000 mL/min
M4	80	55	83	16	55	2×M6	G3/8	0.1 … 4 L/min
M6	80	62	83	14	55	2×M6	G1/2	0.15 … 8 L/min
M10	80	65	83	14	55	2×M6	G1/2	0.5 … 20 L/min
M15	110	65	113	28	90	2×M6	G3/4	2 … 50 L/min
M25	124	70	138	29	100	2×M8	G1	5 … 150 L/min

A body width, B body height, D width over the flats, H height of the port centre, E hole spacing in the base, F tapped holes, G pipe thread (female).

5 Installation

– Install the flowmeter so that the medium flows in the direction of the arrow on the body (indication direction).
– Install a strainer upstream of the flowmeter. A filter finer than 100 mesh is recommended.
– Install the flowmeter in a horizontal pipe with the electronics head pointing horizontally (view onto the cover, see figure). Do not install it with the electronics head pointing vertically upward.

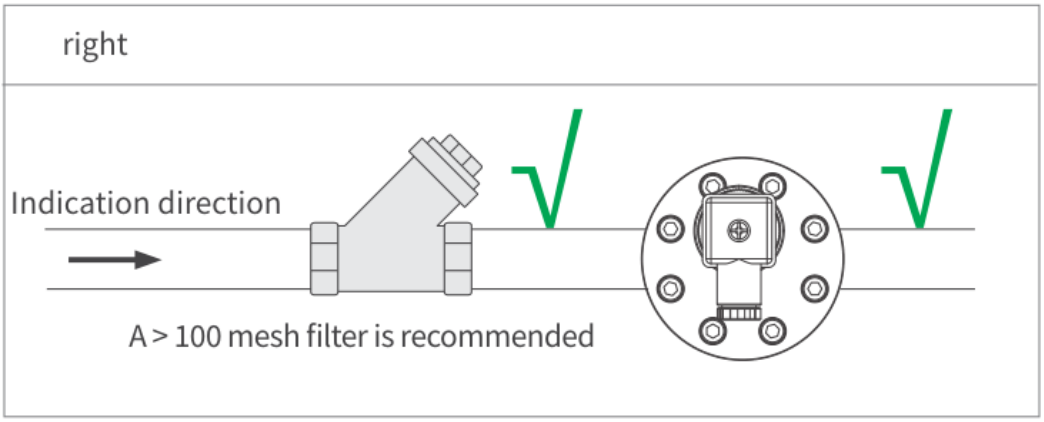

Correct: strainer upstream, flowmeter with the electronics head pointing horizontally.

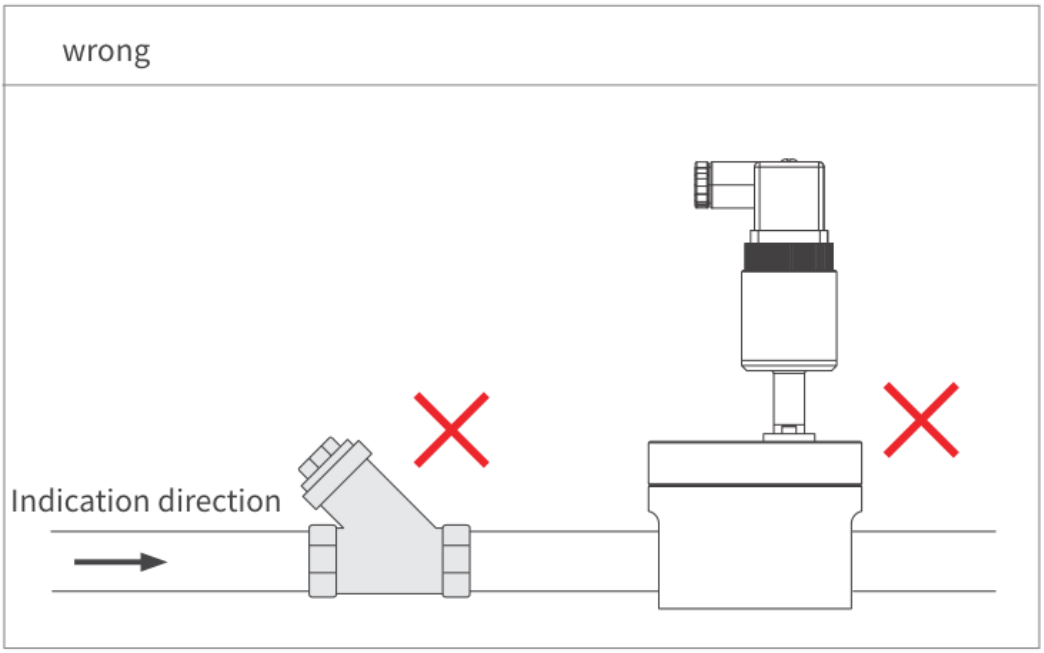

Wrong: flowmeter with the electronics head pointing vertically upward.

The installation figures are for reference only.

6 Electrical connection

Hersman plug connection method	M12 aviation plug connection
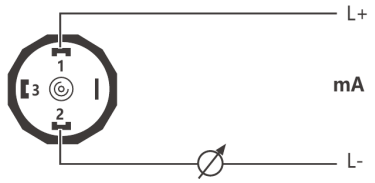	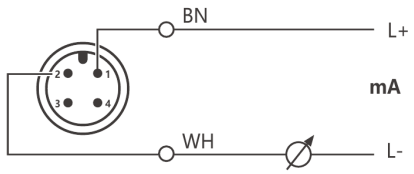
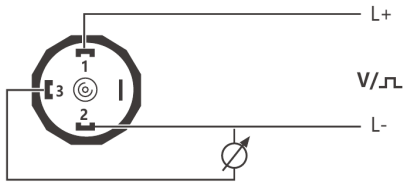	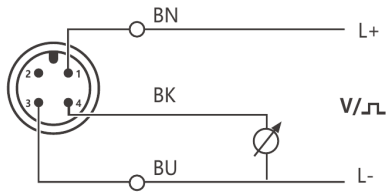

Left: Hersman connector, right: M12 × 1 plug. Top: 4 … 20 mA two-wire, bottom: pulse output. The symbol in the loop is the load (input of the downstream instrument).

6.1 Hersman connector

Pin	4 … 20 mA (two-wire)	Pulse
1	L+ (supply +)	L+ (supply +)
2	loop: via the load to L–	L– (supply –)
3	–	pulse signal, via the load to L–

6.2 M12 × 1 plug

Pin	Wire colour	4 … 20 mA (two-wire)	Pulse
1	brown (BN)	L+ (supply +)	L+ (supply +)
2	white (WH)	loop: via the load to L–	–
3	blue (BU)	–	L– (supply –)
4	black (BK)	–	pulse signal, via the load to L–

Supply voltage 16 … 30 V DC. In the 4 … 20 mA version the flowmeter is a two-wire device: it sits in the current loop between L+ and the load.

Flow from the pulse output: Q = f × 60 / K (Q in L/min, f output frequency in Hz, K pulses per litre of the flowmeter).

7 Troubleshooting

Fault	Possible cause	Remedy
No output signal after switching on	1. No medium flow in the pipe, or the flow is below the starting flow. 2. Supply incorrectly connected to the output cable.	1. Increase the flow, or use a flowmeter of a smaller size that suits the flow range. 2. Connect the cables correctly.
Output signal although there is no flow	1. Poor grounding of the flowmeter; interference from heavy-current lines and other ground lines. 2. Sensitivity of the amplifier too high, or self-excitation. 3. Unstable supply, poor filtering or other electrical interference.	1. Connect the ground correctly to eliminate interference. 2. Replace the preamplifier. 3. Repair or replace the power supply to eliminate interference.
Unstable instantaneous flow indication	1. Unstable medium flow. 2. Sensitivity of the amplifier too high or too low; double or missing pulses. 3. Debris in the housing. 4. Poor grounding. 5. Flow below the lower limit. 6. Foreign matter in the pipe causing disturbance.	1. Test again when the flow is stable. 2. Replace the preamplifier. 3. Remove the dirt. 4. Check the ground cable and make sure it is in order.
Indicated total does not match the actual total	1. Incorrect K factor set in the downstream instrument. 2. The normal flow of the application is below or above the flow range of the selected flowmeter. 3. The flowmeter itself is out of tolerance.	1. Enter the correct K factor after recalibration. 2. Adjust the flow in the pipe, or choose a flowmeter of a suitable size. 3. Recalibrate.