OCTOGON

MANUAL

QTKE

ELECTRONIC TURBINE FLOW SENSOR

Installation and operating manual



Document	Version	Date	Applies to
Installation and operating manual	V00x	11/2026	QTKE, all calibers and output versions A, AL, R, A2

This manual describes the QTKE electronic turbine flow sensor with LED display: technical data, dimensions, installation, electrical connection, keys and menus, the RS485 interface and maintenance.

octogon GmbH · Roseggerstrasse 16 · 8700 Leoben · Austria · office@octogon.org

Contents

1 About this manual ... 2
1.1 Notices ... 2
1.2 Versions covered ... 3
2 Safety ... 3
2.1 Intended use ... 3
2.2 Transport and installation ... 3
2.3 Electrical connection ... 3
2.4 Commissioning and operation ... 3
2.5 Disposal ... 3
3 Product description ... 3
3.1 Overview ... 3
3.2 Technical data ... 3
3.3 Flow range ... 4
3.4 Order code ... 4
4 Dimensions ... 5
4.1 Thread and clamp connection ... 5
4.2 Flange connection (PN 1.6 MPa) ... 5
5 Installation ... 6
6 Electrical connection ... 6
6.1 Version A: two switches / pulse + analog (5 poles) ... 6
6.2 Version AL: one switch / IO-Link / pulse + analog (5 poles) ... 6
6.3 Version R: RS485 (4 poles) ... 6
6.4 Version A2: two analog channels (4 poles) ... 7
7 Display and keys ... 7
8 Operation and menus ... 7
8.1 Operating the menu ... 7
8.2 Switching function ... 7
8.3 Level 1 ... 8
8.4 Level 2 ... 8
9 Serial interface RS485 (version R) ... 8
10 Maintenance, cleaning and removal ... 9
10.1 Maintenance ... 9
10.2 Cleaning ... 9
10.3 Removal ... 9
11 Accessories ... 9

1 About this manual

Read this manual before installing the sensor and keep it available for later use. Values and order codes refer to the QTKE order code (section 3.4).

1.1 Notices

Safety instructions are intended to protect users from dangerous situations and/or prevent material damage. In this manual the severity of a potential risk is indicated by the following signal words:

Signal word	Meaning
Danger	An imminent danger to the user. Failure to comply may result in fatal injury.
Warning	An identifiable hazard. Failure to comply may result in fatal injury and damage to equipment or plant parts.
Caution	A danger. Non-compliance may result in minor injury and material damage to the sensor and/or the plant.
Important	Information that is important to the user.

1.2 Versions covered

Feature	Versions
Caliber	DN10 … DN300
Process connection	External thread (up to DN50) · internal thread · flange · sanitary clamp (up to DN100)
Output	A (analog + two switches/pulse) · AL (analog + one switch/IO-Link/pulse) · R (RS485) · A2 (dual analog with temperature)
Pick-up	Coil type (display unit detachable) or Hall type (up to DN25)
Temperature	Conventional ≤ 100 °C · H ≤ 130 °C · H1 ≤ 180 °C
Medium	Oil (factory default) or water

2 Safety

2.1 Intended use

Danger Use the sensor only within its specified range of application. The temperature must stay within the permissible range. Do not exceed the rated pressure and the rated electrical load. Assembly, commissioning and operation must be carried out in accordance with the applicable national and local safety regulations.

2.2 Transport and installation

Caution Avoid vibration and violent shocks during transport. Even if the housing is not damaged, internal components can break and cause failure.

Danger Install the sensor only in systems that do not exceed the maximum pressure Pmax (see type label). Install the sensor only when the system is de-energised and depressurised (electrical, hydraulic/pneumatic).

2.3 Electrical connection

Warning Wiring must be done by a qualified electrician, and the national and international codes for the installation of electrical equipment must be followed. The supply voltage must comply with EN 50178, SELV and PELV.

2.4 Commissioning and operation

Only authorised personnel may commission and operate the sensor.

Warning The surface of the housing may become very hot at high operating temperatures. Do not put the sensor into operation if the sensor itself or the connecting cable is damaged.

Caution Do not operate the keys with sharp or hard objects; they may damage the keys.

2.5 Disposal

Sensors must be handled in accordance with the national or local regulations for electrical/electronic equipment. Sensors must not be disposed of with household waste.

3 Product description

3.1 Overview

The QTKE is an electronic turbine flow sensor with an all-metal housing and a bright four-digit LED display. Three keys and a menu make it easy to set up, and the various process connections meet different installation needs. The display head can be turned by 330° for the best viewing angle in every mounting position.

3.2 Technical data

Item	Value
Measuring range	DN 10 … DN 300

Measuring accuracy	≤ ±1.0 % of the range
Switching accuracy	≤ ±0.5 % of the range
Analog output accuracy	≤ ±0.5 % of the range
Response time	0.1 ... 5 s
Display	LED, four digits · display range 0.000 ... 9999
Measured medium	Oil (factory default) or water, set by order code
Nominal pressure PN	6.3 · 16 · 25 · 40* MPa to DN32 · 2.5 MPa to DN100 · 1.6 MPa to DN300
Max. pressure loss	0.05 MPa at DN10 · 0.035 MPa to DN32 · 0.025 MPa to DN300
Display head housing	Engineering plastic
Housing	Stainless steel 304
Turbine rotor	Duplex steel
Bearing	Graphite up to DN32 · tungsten steel from DN40
Protection grade	IP67
Medium temperature	≤ 100 °C conventional · ≤ 130 °C type H · ≤ 180 °C type H1 (order code)
Ambient temperature	-20 ... +80 °C
Storage temperature	-30 ... +80 °C
Supply voltage	12 ... 30 Vdc
Power consumption	< 60 mA
Output, flow	Switch · analog · pulse · IO-Link · RS485
Output, temperature	Switch · analog · RS485 - code A2 only
Switch load	< 200 mA at 24 Vdc
Wiring protection	Reverse polarity, overload and short circuit
Outlet	M12x1 connector

* The asterisk at 40 MPa stands so in the data sheet.

3.3 Flow range

DN	Q min coil (m³/h)	Q min Hall (m³/h)	Q max (m³/h)	DN	Q min coil (m³/h)	Q max (m³/h)
10	0.2	0.06	1.2	65	8	80
12	0.4	0.2	4	80	10	100
15	0.6	0.12	6	100	20	222
20	0.8	0.25	8	125	25	250
25	1	0.36	10	150	40	400
32	1.5	—	15	200	80	800
40	2	—	20	250	120	1200
50	4	—	40	300	180	1800

Values as in the data sheet. The Hall pick-up is available up to DN25.

3.4 Order code

Field	Code	Meaning
1 Series	QTKE	Electronic turbine flow sensor
2 Caliber	010 · 012 · 015 · 020 · 025 · 032 · 040 · 050 · 065 · 080 · 100 · 125 · 150 · 200 · 250 · 300	DN10 ... DN300
3 Supply	DC	DC 24 V ±20 %
4 Output	A · AL	Analog + two switches / pulses · analog + one switch / IO-Link / pulse
	R · A2	RS485 output · dual analog, with temperature measurement
5 Process	M · K	External thread, up to DN50 · internal thread
	F · H	Flanged joint · sanitary clamp, up to DN100
6 Outlet	Q	M12x1 connector
7 Pick-up	– · G	Coil type, display unit detachable · Hall type, up to DN25, display unit must not be disassembled
8 Temperature	– · H · H1	≤ 100 °C · ≤ 130 °C · ≤ 180 °C (H1: coil type mandatory; mount more than 500 mm away from the power frequency source)
9 Medium	– · S	Oil (factory default) · water

Example: QTKE-015 DC A M Q - - -. Fields 7, 8 and 9 are written as a dash when the default applies.

4 Dimensions

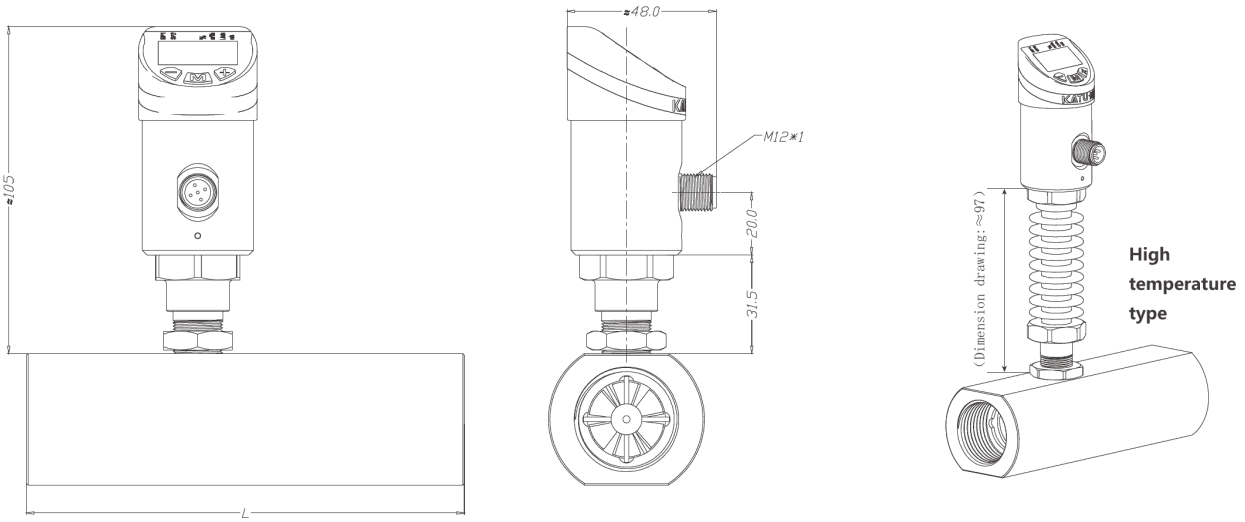

Left and centre the standard type, right the high-temperature type with cooling section. Dimensions in mm.

Head ≈ 105 mm high, ≈ 48.0 mm wide; the M12x1 connector sits 31.5 mm above the process connection. The high-temperature type adds a cooling section of about 97 mm. With the straight pipe section the body length of DN10 is 345 mm instead of 65 mm.

4.1 Thread and clamp connection

DN	External thread G	L ext.	Internal thread G	L int.	Clamp Ø	L clamp
10	G1/2	65	1/2	80	50.5	50
12	G3/4	65	1/2	80	50.5	50
15	G1 (33.2)	75	1/2	110	50.5	75
20	G1 (33.2)	85	3/4	115	50.5	85
25	G1-1/4 (41.9)	100	1	140	50.5	100
32	G1-1/2 (47.8)	120	1-1/4	172	50.5	120
40	G2 (59.6)	140	1-1/2	180	64	140
50	G2-1/2 (75.1)	150	2	200	78	150
65	G3	175	2-1/2	235	91	175
80		200	3	260	106	200
100					119	220

All dimensions in mm. Empty cells as in the data sheet.

4.2 Flange connection (PN 1.6 MPa)

DN	Flange Ø	Bolt circle	Hole Ø	Holes	Thickness	Body length L
12	95	65	14	4	14	65
15	95	65	14	4	14	75
20	105	75	14	4	16	85
25	115	85	14	4	16	100
32	140	100	18	4	18	120
40	150	110	18	4	18	140
50	165	125	18	4	20	150
65	185	145	18	8	20	175
80	200	160	18	8	20	200
100	220	180	18	8	22	220
125	250	210	18	8	22	250
150	285	240	22	8	24	300
200	340	295	22	12	26	360
250	400	355	26	12	28	400
300	460	410	26	12	32	500

5 Installation

Important Make sure that the system is depressurised before installing or removing the sensor.

– Connect the sensor to the selected process connection.
– Tighten fully; recommended tightening torque 25 to 35 N·m.
– In critical applications (such as violent vibration or shock) the pipe joint can be decoupled mechanically with a short hose.
– Install the sensor in a horizontal pipe, with a straight pipe section of 10 × the pipe diameter before and 5 × the pipe diameter after the sensor. The installation example shows a strainer upstream of the inlet section.
– Vertical installation is not recommended. Eliminate air bubbles.
– If the thread is sealed with PTFE tape, do not leave any tape inside the pipe - it can make the turbine stall.

6 Electrical connection

Cut off the power and connect the sensor according to the wiring diagram of its version. Wire colours: BN brown, BK black, WH white, GY grey, BU blue.

Pin	Wire	Signal
1	BN brown	Power supply + · 12 ... 30 Vdc
4	BK black	Switch SP1 / pulse / IO-Link · RS485 (B) · flow analog with A2
2	WH white	Analog · switch SP2 with A · RS485 (A) · temperature analog with A2
5	GY grey	Analog quantity - code A only
3	BU blue	Power supply – · GND

6.1 Version A: two switches / pulse + analog (5 poles)

BN	**1**	Power supply positive (+)
WH	**2**	Switch output (SP2)
BU	**3**	Power supply negative (-)
BK	**4**	Switch Output (SP1)/pulse
GY	**5**	Analog quantity

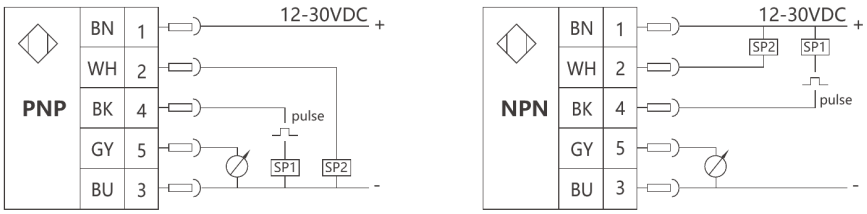

BK switch output SP1 or pulse, WH switch output SP2, GY analog; PNP left, NPN right.

6.2 Version AL: one switch / IO-Link / pulse + analog (5 poles)

BN	**1**	Power supply positive (+)
BK	**4**	Switch/pulse /IO-Link
WH	**2**	Analog quantity
BU	**3**	Power supply negative (-)

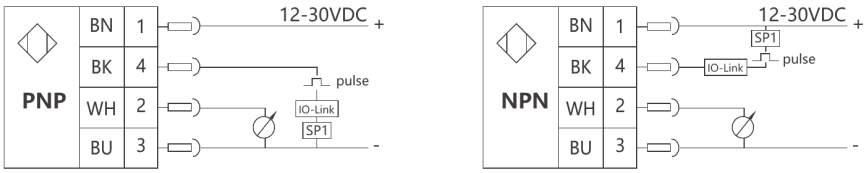

BK switch output SP1, IO-Link or pulse, WH analog; PNP left, NPN right.

6.3 Version R: RS485 (4 poles)

BN	**1**	Power supply positive (+)
WH	**2**	RS485 (A)
BU	**3**	Power supply negative (-)
BK	**4**	RS485 (B)

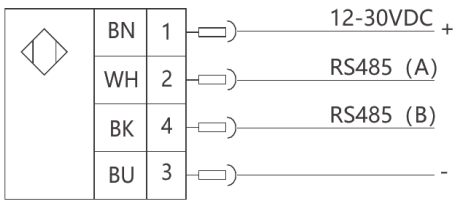

WH RS485 (A), BK RS485 (B).

6.4 Version A2: two analog channels (4 poles)

BN	**1**	Power supply positive (+)
BK	**4**	Flow analog (F)
WH	**2**	Temperature analog (T)
BU	**3**	Power supply negative (-)

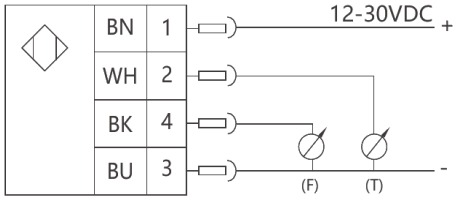

BK flow analog (F), WH temperature analog (T).

7 Display and keys

Element	Function
LED display	Four digits, measured value and menu
SP1, SP2	Signal lamps of switch outputs 1 and 2
Unit lamps	Unit indicator lights
–	Up/down key
M	Confirm/exit key
+	Down/increase key

8 Operation and menus

8.1 Operating the menu

– On the display press **M**: level 1 of the menu opens.

– **+** and **–** move between the menu items; **M** opens an item and returns to the item list.

– To change a value, press and hold **+** or **–** for at least 1 s; after 1 s the value can be changed. Each press changes the value by one step; holding the key changes it continuously.

– At **EF** (end of level 1), **M** opens level 2 (extended functions) and **+** returns to the display. At **EF** at the end of level 2, **M** goes back to the beginning of level 2 and **+** returns to the display.

8.2 Switching function

If the measured value rises above or falls below the set switching limits (**SP**, **rP**), the switching state of the output changes. The following switching functions can be selected:

Function	Setting	Behaviour
Hysteresis, normally open	**Hno**	The output switches at the switching point **SP** and resets at the reset point **rP**.
Hysteresis, normally closed	**Hnc**	As above, with the output inverted.
Window, normally open	**Fno**	The window lies between **rP** (lower limit) and **SP** (upper limit).
Window, normally closed	**Fnc**	As above, with the output inverted.

For the hysteresis function, set the switching point **SP** first and then the reset point **rP**; if **SP** is changed again, the hysteresis changes with it. For the window function, the width of the window is the difference between **SP** (upper limit) and **rP** (lower limit).

8.3 Level 1

Item	Function	Factory default
SP1	Alarm value of switch 1	0.2 % of the range
rP1	Reset value of switch 1	SP1 – 0.5 %
SP2	Alarm value of switch 2 (not on the one-switch version)	0.8 % of the range
rP2	Reset value of switch 2 (not on the one-switch version)	SP2 – 0.5 %
ASP	Lower range limit (range reference value)	Lower range limit
AEP	Upper range limit (range reference value)	Upper range limit
L-Ac	Low-flow cut-off	–
EF	Extended functions: opens level 2	–

8.4 Level 2

Item	Function	Factory default
rES	Restore the factory settings: press and hold **+**	–
ou1	Switch 1 signal: hysteresis **Hno** (normally open) / **Hnc** (normally closed) · window **Fno** / **Fnc** · pulse function **Hz**	**Hno**
ou2	Switch 2 signal: hysteresis **Hno** / **Hnc** · window **Fno** / **Fnc**	**Hnc**
dS1	Switching delay of OUT1	0 s
dr1	Reset delay of OUT1	0 s
dS2	Switching delay of OUT2	0 s
dr2	Reset delay of OUT2	0 s
uni	Unit of the displayed value	–
P-n	Switching outputs PNP or NPN	PNP
Lo	Historical minimum of the measured value	–
Ho	Historical maximum of the measured value	–
dAP	Damping of the switching point, the process data (IO-Link) and the display	0.06
diS	Update rate of the display: **d1** every 10 ms · **d2** every 100 ms · **d3** every 600 ms	**d1**
ZERo	Zero cut-off value (% of full scale)	0.5
dAA	Display refresh time, analog 0.1 s (not on versions without analog output)	0.01
iout	Analog output (not on versions without analog output): current **4-20** · **20-4** · **0-20** · **20-0** mA; voltage **1-5** · **5-1** · **0-5** · **5-0** V or **1-10** · **10-1** · **0-10** · **10-0** V	–
-Fc-	Coefficient function	–
-FI-	Coefficient correction	–
EF	End of level 2	–

9 Serial interface RS485 (version R)

Item	Value
Protocol	Modbus RTU, master-slave query mode
Byte format	11 bits: 1 start bit, 8 data bits (least significant bit first), 1 parity bit, 1 stop bit; without parity check 1 or 2 stop bits can be selected
Baud rate	2400, 4800, 9600 (default), 19200 or 115200 (setting values 0 … 4)
Address	Default 1, can be changed; 0 … 255, address 0 is for broadcast, which is not supported
Data format	32-bit single-precision floating point (IEEE 754), most significant word first; byte order 3-4-1-2 (decoded 1-2-3-4)

Frame: start (idle ≥ 3.5 characters) · address (8 bit) · function code (8 bit) · data (n x 8 bit) · CRC (16 bit) · end (idle ≥ 3.5 characters). The whole frame must be sent as a continuous character stream; the idle time between two characters must not exceed 1.5 characters.

Command	Function	Request
03	Read holding registers	Address (1 byte, 01 … 255) · 0x03 · start address 0 … FFFF (2 bytes) · quantity 1 … 12 (2 bytes) · CRC low · CRC high
06	Write single holding register	Address (1 byte) · 0x06 · further bytes not specified in the protocol - used to clear the totalised flow

Access	Modbus address	Content
R	40001	Flow value (unit as set for the display)
R	40002	Number of decimal places of the flow

The register used to clear the totalised flow is not stated. The menu described in chapter 8 contains no setting for address and baud rate.

10 Maintenance, cleaning and removal

10.1 Maintenance

The sensor does not require maintenance. Check periodically whether it is working properly.

Warning If the sensor does not work properly, stop the operation immediately.

Warning The surface of the housing may become very hot at high operating temperatures.

10.2 Cleaning

Caution Unsuitable cleaning agents may damage the sensor.

The following cleaning agents can be used to clean polycarbonate: mild soap or detergent, isopropyl alcohol. Rinse with water immediately after cleaning. Do not leave cleaning agent on the surface of the product. Do not clean the product in high heat or in direct sunlight.

The following substances are known to affect the integrity of polycarbonate parts and must not be used:

- halogenated solvents (benzene, gasoline, acetone or carbon tetrachloride),
- strongly alkaline agents,
- methyl ethyl ketone,
- abrasive substances.

10.3 Removal

Danger Remove the sensor only when the system is de-energised and depressurised (electrical, hydraulic/pneumatic). Disconnecting the sensor from pressure and power supply must be performed by trained or instructed personnel in accordance with the state of the art.

11 Accessories

Accessory	Data
Cable socket M12x1, 5 poles, straight or angled	PUR or PVC cable, 2, 5 or 10 m · for versions A and AL
Cable socket M12x1, 4 poles, straight or angled	PUR or PVC cable, 2, 5 or 10 m · for versions R and A2
Self-wiring socket M12x1, straight or angled	4 or 5 poles, Pg7 (Pg9) cable gland

Accessories are ordered by description; the order codes are given in the data sheet. Please state the sensor type with the enquiry.