OCTOGON

MANUAL

QMKD

COMPACT ELECTROMAGNETIC FLOWMETER

Installation and user manual

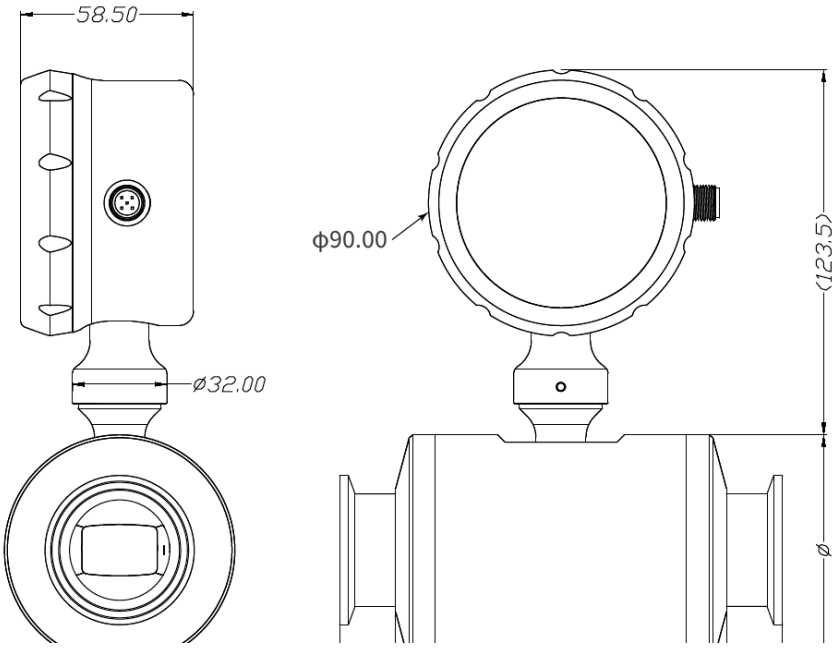

Document	Version	Date	Applies to
Installation and user manual	V00x	11/2026	QMKD, DN4 ... DN50, all versions

This manual describes the QMKD compact electromagnetic flowmeter: working principle, technical data, dimensions, installation, electrical connection, operation with the three keys, the complete menu and the Modbus registers of the RS485 interface.

Contents

1 About this manual ... 2
1.1 Notices ... 2
1.2 Versions covered ... 2
2 Safety ... 3
3 Product description ... 3
3.1 Working principle ... 3
3.2 Features ... 3
3.3 Technical data ... 3
3.4 Order code ... 4
3.5 Accessories ... 4
4 Dimensions ... 4
5 Installation ... 7
5.1 Installation position ... 7
5.2 Mounting ... 7
5.3 Recommended installation locations ... 8
5.4 Pipe connections for cleaning ... 8
6 Electrical connection ... 9
6.1 PR version: pulse / current / RS485 (eight-pin) ... 9
6.2 RA version: RS485 / analogue mA (five-pin) ... 9
6.3 Outputs ... 9
7 Display and keys ... 10
7.1 Key functions ... 10
8 Menu ... 11
8.1 Authority management ... 11
8.2 Communication setup ... 11
8.3 Display setting ... 11
8.4 Digital output ... 11
8.5 Current output ... 11
8.6 Alarm setting ... 12
8.7 Flow setting ... 12
8.8 Factory setup ... 12
8.9 Instrument information ... 13
9 Modbus registers (RS485) ... 13
9.1 Alarm register 24 ... 13

1 About this manual

Read this manual before installing the flowmeter and keep it available for later use. Technical data, dimensions and order codes in this manual are those of the QMKD datasheet.

1.1 Notices

Notice	Meaning
Warning	Risk of injury or of damage to property if the instruction is not followed.
Important	Pay particular attention to the following instruction.
Note	Further information.

1.2 Versions covered

Feature	Versions
Process connection	clamp (H), G internal thread (GK), G external thread (GM), flange clamp (F)
Nominal size	DN4 · DN8 · DN12 · DN15 · DN25 · DN32 · DN40 · DN50
Output	PR: pulse / current / RS485, eight-pin · RA: RS485 / analogue mA, five-pin
Temperature	four temperature classes, standard or high-temperature version (finned neck)
Sealing	silicone, perfluoroether, EPDM, fluoroceramic or nitrile
Manufacturer type designation	FM260

2 Safety

Warning Risk of personal injury - overpressure danger.

- Before installing the device, read this manual and make sure that the product is suitable for your application without restriction.
- Failure to follow the operating instructions or the technical data may result in personal injury or damage to property.
- In every application, check that the materials of the product are compatible with the medium to be measured, and make sure that the medium does not damage the wetted parts of the product.
- Use the device only for the media for which it is intended; correct use is the condition for long-term stable operation.

The operator is responsible for deciding whether the flowmeter is suitable for the application. Improper installation and use void warranty claims.

3 Product description

3.1 Working principle

According to Faraday's law of induction, a conductor moving perpendicular through a magnetic field B induces a voltage. In the flowmeter the moving conductor is the conductive medium; the magnetic field is perpendicular to the flow direction. The voltage U induced at the two electrodes E1 and E2 is proportional to the flow velocity V of the medium:

$U = K \times B \times V \times D$ (K instrument factor, D spacing of the electrodes)

The induced voltage is processed and converted into a standard output signal and shown on the display.

3.2 Features

- Compact design saves installation space.
- Corrosion-resistant sensor technology; all-electronic design without moving parts.
- Automatic temperature compensation.
- Pulse output, analogue output and RS485 communication, depending on the version.
- Low pressure loss; good resistance to fouling.

3.3 Technical data

Item	Value
Measuring principle	Faraday's law of induction · U = K × B × V × D
Media	Conductive liquids, conductivity above 20 µS/cm
Flow range	0.1 … 10 L/min at DN4 up to 7 … 45 m³/h at DN50 — see the tables
Accuracy	≤ ± 0.5 % of range · reproducibility ≤ ± 0.2 % of range
Response time	< 100 ms
Nominal size	DN4 … DN50
Measuring tube	PEEK
Electrode	Hastelloy C
Connection and shell	Stainless steel 304
Sealing	Five materials, see the order code
Pressure resistance	16 bar
Medium temperature	-40 … +120 °C without thermal shock · +140 °C optional
Ambient temperature	-25 … +85 °C
Connection types	Clamp · G internal thread · G external thread · flange clamp
Supply voltage	24 Vdc ± 10 %
Consumption	≤ 80 mA · reverse-polarity and short-circuit protected
Pulse output	NPN, pull-up resistor 2 kΩ
Analogue output	4 … 20 mA · current limited to 26 mA · load < 250 Ω
Communication	RS485
Electrical connection	M12 × 1 connector · eight-pin for pulse/current/RS485, five-pin for RS485 and current

Display	Colour display in the round head
Shown	Instantaneous flow with its unit and the totalized quantity
Keys	Three · M, plus and minus

3.4 Order code

Field	Code	Meaning
1 Series	QMKD	QMKD compact electromagnetic flowmeter
2 Connection	H · GK	Clamp · G internal thread
	GM · F	G external thread · flange clamp
3 Size	04 · 08 · 12	DN4 · DN8 · DN12
	15 · 25	DN15 · DN25
	32 · 40 · 50	DN32 · DN40 · DN50
4 Output	PR	Pulse / current / RS485 · eight-wire
	RA	RS485 / analogue mA · five-wire
5 Temperature	— · H1	-20 … +80 °C · -20 … +140 °C
	H2 · H3	-40 … +120 °C · -40 … +140 °C
6 Sealing	— · K	Silicone, for coolant -40 … +120 °C · perfluoroether
	E · F	EPDM · fluoroceramic, 0 … +120 °C
	N	Nitrile

Example: QMKD-H-04-PR-—-— - clamp connection, DN4, pulse / current / RS485 (eight-pin), standard temperature class, standard sealing.

3.5 Accessories

M12 × 1 connecting cables with socket, PVC or PUR, 2 · 5 · 10 m: eight-pin for the PR version, five-pin for the RA version (also angled), and self-wiring five-pin connectors, straight or angled, with Pg7 or Pg9 gland. Accessories are ordered by description; please state the flowmeter order code with the enquiry.

4 Dimensions

The head is Ø 90 mm and 58.5 mm deep, the neck Ø 32 mm, on every version. Overall height 123.5 mm (standard) or 155 mm (high-temperature version with finned neck). A overall length, B length of the body, Ø body diameter; above DN25 the last column is C, the overall height. Clamp sizes 25.4, 50.5, 64 and 77.5 are the outer diameters of the ferrule in mm.

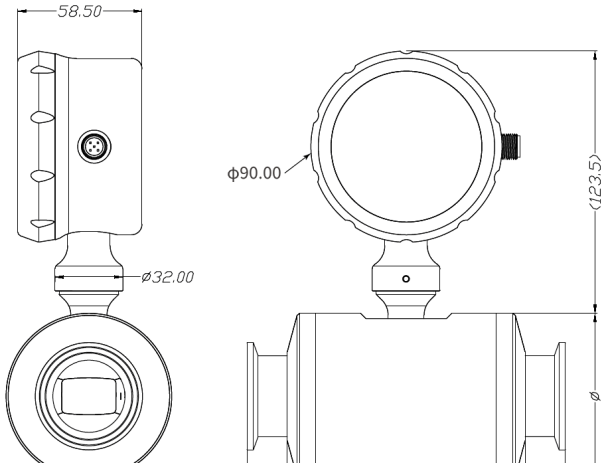

Clamp version (H). Dimensions in mm.

Model	Clamp	DN	A	B	Ø or C	Range
QMKD-H04	25.4	DN4	90	60	45	0.1 ... 10 L/min
QMKD-H08	25.4	DN8	104	74	60	0.5 ... 25 L/min
QMKD-H12	50.5	DN12	120	90	70	1 ... 60 L/min
QMKD-H15	50.5	DN15	120	90	70	3 ... 100 L/min
QMKD-H25	50.5	DN25	150	112	78	4 ... 200 L/min
QMKD-H32	50.5	DN32	200	150	220	20 ... 300 L/min
QMKD-H40	64	DN40	200	150	250	4 ... 30 m³/h
QMKD-H50	77.5	DN50	200	150	300	7 ... 45 m³/h

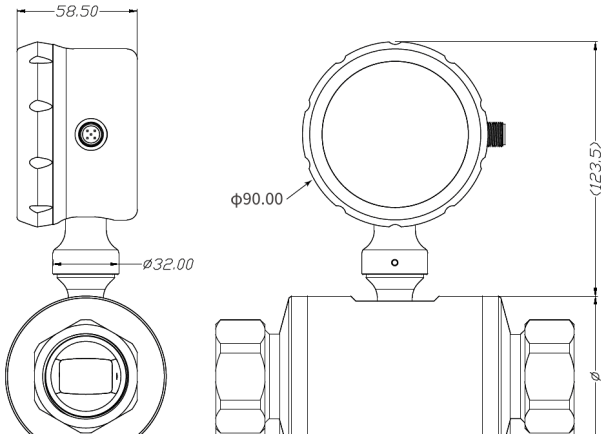

Internal thread version (GK).

Model	Thread	DN	A	B	Ø or C	Thread L	Range
QMKD-GK04	G1/4″	DN4	90	60	45	13	0.1 ... 10 L/min
QMKD-GK08	G1/2″	DN8	122	74	60	13	0.5 ... 25 L/min
QMKD-GK12	G3/4″	DN12	142	90	70	15	1 ... 60 L/min
QMKD-GK15	G3/4″	DN15	142	90	70	15	3 ... 100 L/min
QMKD-GK25	G1-1/4″	DN25	174	112	78	20	4 ... 200 L/min
QMKD-GK32	1-1/2″	DN32	210	150	220	—	20 ... 300 L/min
QMKD-GK40	G2″	DN40	270	150	250	—	4 ... 30 m³/h
QMKD-GK50	G2″	DN50	270	150	300	—	7 ... 45 m³/h

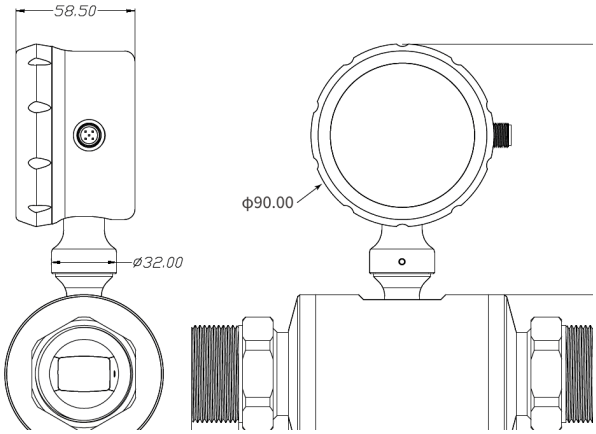

External thread version (GM).

Model	Thread	DN	A	B	Ø or C	Thread L	Range
QMKD-GM04	G1/4″	DN4	110	60	45	12	0.1 ... 10 L/min
QMKD-GM08	G1/2″	DN8	141	74	60	18	0.5 ... 25 L/min
QMKD-GM12	G1″	DN12	170	90	70	20	1 ... 60 L/min
QMKD-GM15	G1″	DN15	170	90	70	20	3 ... 100 L/min
QMKD-GM25	G1-1/2″	DN25	207	112	78	25	4 ... 200 L/min
QMKD-GM32	G1-1/2	DN32	210	150	220	—	20 ... 300 L/min
QMKD-GM40	G2″	DN40	270	150	250	—	4 ... 30 m³/h
QMKD-GM50	G2-1/2	DN50	270	150	300	—	7 ... 45 m³/h

Flange clamp version (F), only up to DN25:

Model	Flange clamp	DN	A	Ø	Range
QMKD-F04	DN15	DN4	63	45	0.1 ... 10 L/min
QMKD-F08	DN25	DN8	80	60	0.5 ... 25 L/min
QMKD-F12	DN32	DN12	92	70	1 ... 60 L/min
QMKD-F15	DN32	DN15	92	70	3 ... 100 L/min
QMKD-F25	DN32	DN25	116	78	4 ... 200 L/min

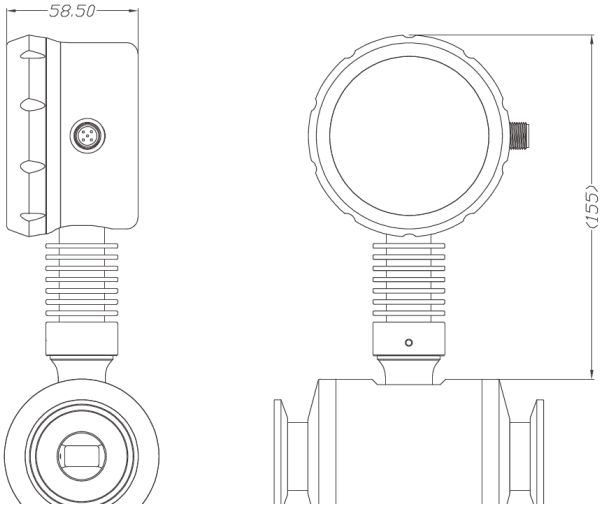

High-temperature version, recognisable by the finned neck: overall height 155 mm instead of 123.5 mm.

5 Installation

5.1 Installation position

Select a straight pipe section in which the flow is stable. As a rule the straight inlet section is 5 to 10 times the nominal diameter (DN × 5 ... 10) and the straight outlet section 3 to 5 times the nominal diameter (DN × 3 ... 5). Keep away from strong magnetic and electric fields, such as large motors, transformers or high-voltage lines; if this is not possible, take shielding measures. The installation position must be easy to service and leave enough room for work.

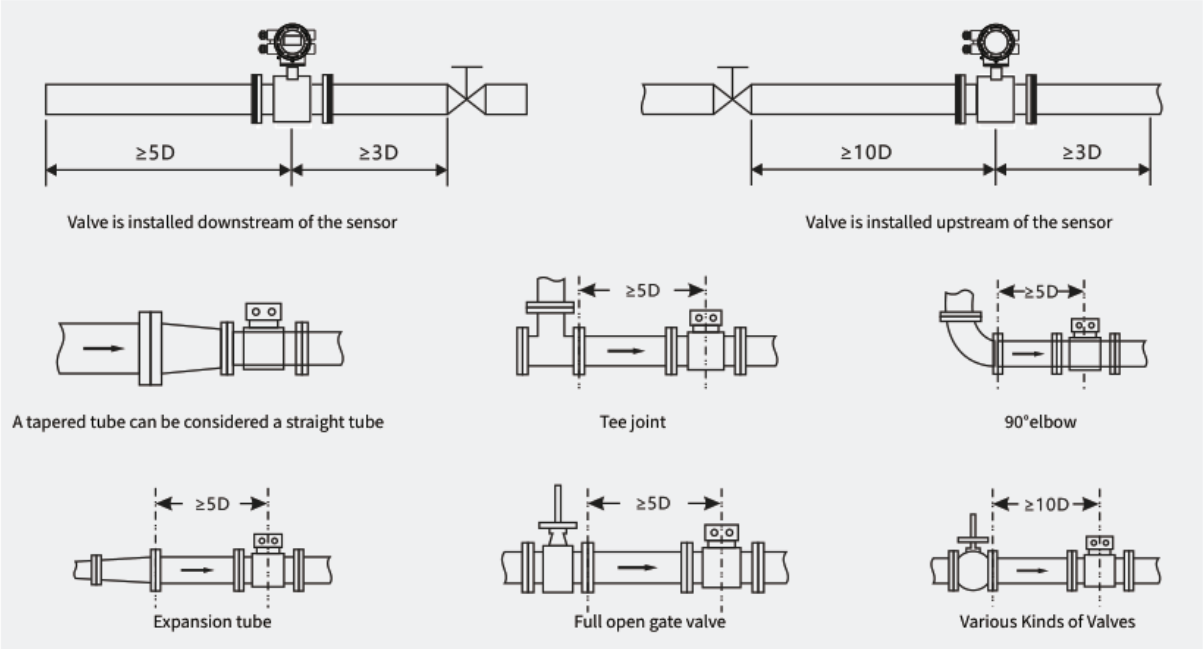

Straight pipe requirements (D = nominal diameter): valve downstream of the sensor ≥ 5D / ≥ 3D, valve upstream ≥ 10D / ≥ 3D; a tapered pipe counts as straight; tee, 90° elbow, expansion and fully open gate valve ≥ 5D; other valves ≥ 10D upstream.

5.2 Mounting

- Horizontal installation: the electrode axis must be parallel to the ground, and the pipes on both sides of the flowmeter must lie in the same horizontal plane, without a height offset.
- The flowmeter can also be installed vertically.
- Handle the flowmeter carefully during installation; avoid knocks and falls.
- Install strictly according to this manual; do not change the installation method or the connection lines arbitrarily.
- After installation, check that all connections are tight and that the cables are connected correctly.

5.3 Recommended installation locations

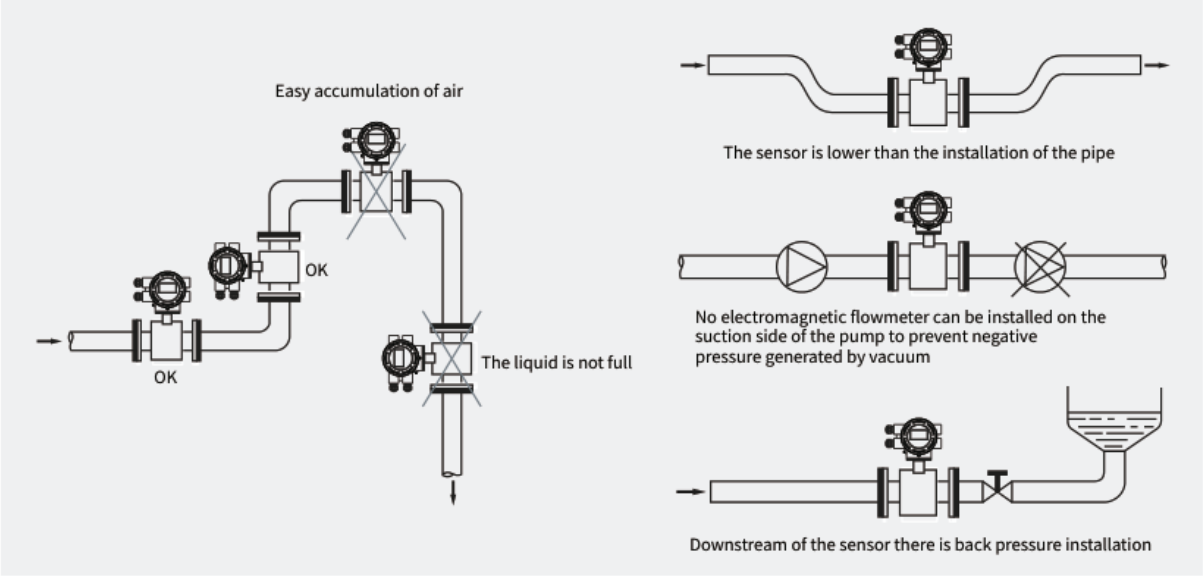

Recommended locations: not at the highest point of the line (air accumulates) and not in a downward pipe that is not completely full; preferably in a low section of the line; not on the suction side of a pump (negative pressure); with a back pressure downstream of the sensor when the line discharges freely.

5.4 Pipe connections for cleaning

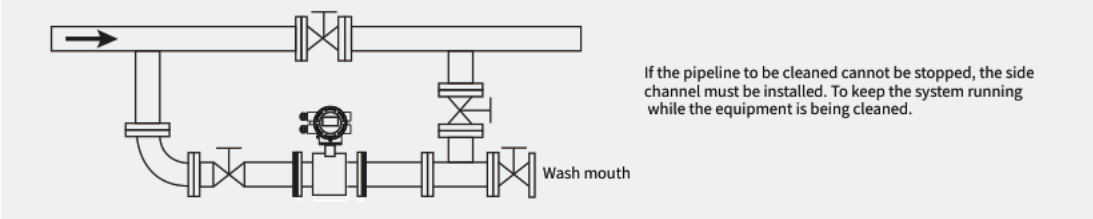

If the line cannot be stopped for cleaning, install a bypass so that the system keeps running while the flowmeter is cleaned.

6 Electrical connection

The flowmeter is connected with an M12 × 1 connector: eight-pin for the PR version, five-pin for the RA version. Supply 24 V DC ± 10 %, consumption ≤ 80 mA; the supply input is protected against reverse polarity and short circuit.

6.1 PR version: pulse / current / RS485 (eight-pin)

Pin	Wire colour	Function
2	brown (BN)	supply (+)
7	blue (BU)	supply (–)
8	red (RD)	RS485 (A)
4	see note	RS485 (B)
6	pink (PK)	pulse (+)
1	white (WH)	pulse (–)
3	green (GN)	current (–)
5	grey (GY)	current (+)

Note: the colour of pin 4 is not given unambiguously in the manufacturer documentation. Identify this wire by its pin number or by the colour code of the connecting cable used.

6.2 RA version: RS485 / analogue mA (five-pin)

Pin	Wire colour	Function
1	brown (BN)	supply (+)
3	blue (BU)	supply (–)
5	grey (GY)	analogue output (mA)
2	white (WH)	RS485 (A)
4	black (BK)	RS485 (B)

6.3 Outputs

Output	Data
Pulse output	NPN, pull-up resistor 2 kΩ
Analogue output	4 … 20 mA, current limited to 26 mA, load < 250 Ω
Communication	RS485 (Modbus registers: chapter 9)

7 Display and keys

The round head carries a colour display and three keys: **M** (left), **+** (right) and **–** (below). The main screen shows:

Display element	Meaning
Top line, e.g. **DN15**	nominal size (caliber)
Unit below, e.g. **L/min**	unit of the instantaneous flow
Large number	current instantaneous flow
Number below the line	totalized (cumulative) flow
Unit at the bottom, e.g. **L**	unit of the totalized flow
Warning triangle	alarm present

7.1 Key functions

Key(s)	Function
M long press	first press: flow-related data are shown; second press: alarm information
M + **–** together	on the main screen: open the password menu. The highest permission level is 4, the password is **000000**. In a menu: back to the previous menu.
+ · **–**	scroll up · scroll down
M + **+** together	shift (move the cursor)
M hold	open the selected menu
– + **+** hold for 5 s	rotate the display by 90° (main screen only)

Every setting window closes with **Cancel** or **Confirm**.

8 Menu

Main menu (open with **M** + **–** and the password, chapter 7): 1 Authority management · 2 Communication setup · 3 Display setting · 4 Digital output · 5 Current output · 6 Alarm setting · 7 Flow setting · 8 Factory setup · 9 Instrument information.

8.1 Authority management

Parameter	Setting range / options	Shown as example
New password settings	enter the new password	**000000**
Instrument reset	the meter restarts · disable / enable	–

8.2 Communication setup

Parameter	Setting range / options	Shown as example
Instrument address	1 ... 247	**001**
Baud rate	9600 · 4800	–
Check bit	no parity check · parity check · odd check	–
Stop bit	1 bit · 2 bit	–

8.3 Display setting

Parameter	Setting range / options	Shown as example
Accumulator selection	accumulator 1 · accumulator 2	–
Accumulator decimal places	3 · 2 · 1	–
Accumulator integer digits	5 ... 15	**08**
Instantaneous quantity selection	flow velocity · volume flow · percentage of full scale	–
User coding	maximum 10 characters	**EMF 0001**
Instantaneous decimal places	2 · 3 · 4 · 1 · none	–
Language	Chinese · English	–
Rotate	0° · 90° · 180° · 270°	–

8.4 Digital output

Parameter	Setting range / options	Shown as example
Output enable	enable · disable	–
Output polarity selection	low level · high level	–
Function selection	frequency · pulse	–
Pulse measurement polarity	forward · reverse · bidirectional	–
Pulse equivalent	0.0 ... 100000000.0 L/P	**1.0 L/P**
Pulse width	0.05 ... 1000 ms	**1.00 ms**
Frequency measurement polarity	forward · reverse · bidirectional · absolute value	–
Frequency range	1 ... 2000 Hz	**1000 Hz**
Frequency duty cycle	10 ... 90 %	**50 %**

8.5 Current output

Parameter	Setting range / options	Shown as example
Output enable	enable · disable	–
Measurement polarity	forward · reverse · bidirectional · absolute value	–
Calibrating enable	prohibit · 20 mA / 4 mA calibration function enabled	–
4 mA calibration value	only after the 4 mA calibration has been enabled	–
20 mA calibration value	only after the 20 mA calibration has been enabled	–
Switch alarm enable	disable · enable	–
Output mode	4-20 mA · 0-20 mA	–

8.6 Alarm setting

Parameter	Setting range / options	Shown as example
Flow reverse alarm enable	enable · disable	–
Flow reverse alarm threshold	–10 ... 10 %	**0.00 %**
Flow upper limit alarm enable	enable · disable	–
Upper flow alarm threshold	–200 ... 200 %	**90.00 %**
Third alarm pair: enable *	enable · disable	–
Third alarm pair: threshold *	–20 ... 200 %	**10.00 %**

* The third pair carries the same labels as the upper-limit pair on the display; according to the alarm list of the Modbus registers (chapter 9) it is the flow lower limit alarm.

8.7 Flow setting

Parameter	Setting range / options	Shown as example
Accumulator 1 unit	maximum 5 characters	**L**
Accumulator 1 unit coefficient	0.000001 ... 1000000	**1000.00**
Accumulator 1 function	forward cumulative · reverse cumulative · total · net · disabled	–
Accumulator 1 set	0.001 ... 999999999	**0.000 L**
Accumulator 2 unit	maximum 5 characters	**L**
Accumulator 2 unit coefficient	0.000001 ... 1000000	**1000.00**
Accumulator 2 function	disable · forward · reverse · total · net	–
Accumulator 2 set	0.001 ... 999999999	**0.000 L**
Flow unit	maximum 8 characters	**L/min**
Coefficient of flow unit	0.000001 ... 1000000	**16.6667**
Flow range	0.0001 ... 999999	**100.000 L/min**
Small signal excision (low-flow cut-off)	0.0001 ... 1.0000 m/s	**0.0050 m/s**
Flow direction setting	forward · reverse	–
Flow reverse measurement enable	enable · disable	–
Filter constant	0 ... 10	**00**
User instrument factor	0.5 ... 1.5	**1.0000**
User zero	–0.01 ... 0.01 m/s	**0.00000 m/s**
ATC detection enable	enable · disable	–
ATC detection threshold	2.0 ... 200.0 kΩ	**40.0 kΩ**
Excitation alarm enable	enable · disable	–

8.8 Factory setup

Parameter	Setting range / options	Shown as example
Caliber	8 ... 300 mm	**015 mm**
Converter coefficient	0.01 ... 10.0	**1.0000**
Sensor coefficient	0.01 ... 10.0	**1.0000**
Sensor zero correction	–0.2 ... 0.2 m/s	**0.00000 m/s**
Electrode impedance 200 kΩ calibration value	calibration, instructions on the display	–
Electrode impedance 0 kΩ calibration value	both signal electrodes short-circuited to ground	–
System forward accumulator set	0.001 ... 999999999 m^3	**00000000.000 m3**
System reverse accumulator set	0.001 ... 999999999 m^3	**00000000.000 m3**
Temperature 0 Ω resistor calibration value	–50.0 ... 50.0 Ω	**0.00 Ω**
Temperature 1 kΩ resistor calibration value	950.0 ... 1050.0 Ω	**1000.00 Ω**
Nonlinear corrected flow rate 1 ... 5	0.00 ... 15.0 m/s	**0.0000 m/s**
Nonlinear correction coefficient 1 ... 5	0.0 ... 10.0	**0.0000**

8.9 Instrument information

Parameter	Setting range / options	Shown as example
Sensor serial number	up to 14 characters	–
Converter serial number	up to 14 characters	–
Converter software version number	up to 14 characters	e.g. **V1.13-20230814**
Converter hardware version number	up to 14 characters	–

9 Modbus registers (RS485)

Address, baud rate, check bit and stop bit of the RS485 interface are set in the menu Communication setup (section 8.2).
Register table of the measured values:

Register	Number	Data type	Value	Unit	Access	Description
0	2	float	flow velocity	m/s	R	updated once per measurement cycle
2	2	float	volume flow	user unit	R	
4	2	float	percentage of flow	%	R	volume flow as a percentage of full scale
6	4	double	user accumulator 1	user unit	R/W	can be changed with the multi-register write command
10	4	double	user accumulator 2	user unit	R/W	
14	4	double	system forward accumulator	m^3	R	–
18	4	double	system reverse accumulator	m^3	R	–
22	2	float	temperature	°C	R	–
24	2	uint32_t	alarm	–	R	bit coded, see table below
26	1	uint16_t	flow direction	–	R	0: forward · 1: reverse
27	2	float	electrode impedance	Ω	R	–
29	2	float	PT1000 resistance value	Ω	R	

9.1 Alarm register 24

Value	Alarm
0x0000	none
0x0001	air flow control alarm
0x0002	flow reverse alarm
0x0004	flow upper limit alarm
0x0008	flow lower limit alarm
0x0010	excitation coil alarm
0x0020	storage exception alarm
0x0040	low electrode resistance alarm
0x0080	temperature upper limit alarm
0x0100	temperature lower limit alarm
0x0200	current open circuit alarm