OCTOGON

MANUAL

QGKE

THERMAL GAS FLOW SENSOR

Installation and user manual



Document	Version	Date	Applies to
Installation and user manual	V00x	11/2026	QGKE, all flow ranges and output versions

This manual describes the QGKE thermal gas flow sensor with colour display: technical data, dimensions, installation in the pipe, electrical connection, operation and the menus of the switch/analogue and the RS485 versions, the RS485 protocol and maintenance.

Contents

1 About this manual ... 2
1.1 Versions covered ... 2
1.2 Type marking ... 2
2 Safety ... 3
2.1 Signal words ... 3
2.2 Intended use ... 3
2.3 Disposal ... 3
3 Product description ... 3
3.1 Working principle ... 3
3.2 Technical data ... 3
3.3 Versions ... 4
3.4 Order code ... 4
4 Dimensions ... 5
4.1 Mounting brackets ... 6
5 Installation ... 6
5.1 Piping ... 6
5.2 Mounting ... 6
6 Electrical connection ... 7
7 Operation ... 8
7.1 Display and keys ... 8
7.2 Switching function ... 8
7.3 Menu navigation ... 8
7.4 Menus of the SV and SA versions ... 9
7.5 Menus of the SR version (RS485) ... 9
8 Serial interface (SR version) ... 11
8.1 Communication parameters ... 11
8.2 Function codes ... 11
8.3 Registers ... 11
8.4 Examples ... 11
9 Maintenance and removal ... 12
9.1 Maintenance and cleaning ... 12
9.2 Removal ... 12

1 About this manual

Read this manual before installing the sensor and keep it available for later use. Values and versions refer to the QGKE order code (section 3.4).

1.1 Versions covered

Feature	Versions
Flow range	500 · 1000 · 2000 · 3000 · 6000 L/min (codes 01 … 05)
Output	SV: two switches + 1 … 5 V · SA: two switches + 4 … 20 mA · SR: two switches + RS485
Connection	Rc1/2 · G1/2 · Rc3/4 · G3/4 · R1 · G1 · G1-1/2, by flow range
Bracket	none, BT-27 … BT-30

1.2 Type marking

The device label carries the type designation FM313 together with the version data.

2 Safety

2.1 Signal words

Safety instructions are intended to protect users from dangerous situations and/or prevent material damage. In this manual the severity of the potential risk is indicated by the following signal words:

Signal word	Meaning
Danger	An imminent danger to the user. Failure to comply may result in fatal injury.
Warning	An identifiable hazard. Failure to comply may result in fatal injury and damage to equipment or plant parts.
Caution	A potential danger. Failure to comply may result in minor injury and material damage to the device and/or the plant.
Important	Information that is important to the user.

2.2 Intended use

The QGKE measures the flow of dry air and nitrogen (N2) - non-corrosive and non-flammable gases - in one flow direction. Depending on the version it has two switch outputs and one analogue output (SV, SA) or two switch outputs and an RS485 interface (SR).

Danger The device may only be used within the specified application range. The temperature must be within the permissible range. Do not exceed the rated pressure and the electrical load values. Assembly, commissioning and operation must be carried out in accordance with the applicable national and local safety regulations.

Important The medium must be free of dew and ice. Observe the working pressure 0 ... 1.0 MPa and the temperature ranges in section 3.2.

2.3 Disposal

Disposal The device must be disposed of correctly in accordance with the national or local regulations for electrical and electronic equipment. Do not dispose of the device with household waste.

3 Product description

3.1 Working principle

Thermal mass flow measurement: the sensor is heated and the gas stream carries heat away; how much heat it carries away is a measure of the mass flow.

3.2 Technical data

Measurement

Item	Value
Media	dry air, nitrogen (N2) · non-corrosive and non-flammable
Direction	unidirectional
Rated flow	500 L/min: 2 ... 500 · 1000 L/min: 5 ... 1000 · 2000 L/min: 10 ... 2000
Display range	0 ... 525 · 0 ... 1050 · 0 ... 2100 L/min
Accuracy range	2 ... 100 % F.S.
Display accuracy	± 3 % F.S. ± 1 digit (1)
Analogue accuracy	± 5 % F.S. (1)
Repeatability	± 1 % F.S. ± 1 digit · ± 2 % F.S. at 50 ms (2)
Linearity	± 3 % F.S. (2)
Temperature effect	± 5 % F.S. (2)
Pressure effect	± 5 % F.S. ± 1 digit (3)
Response time	≤ 100 ms · adjustable filter damping on the switch outputs

(1) Measured with 600 kPa at the inlet, one atmosphere at the outlet and 25 °C. (2) Measured with one atmosphere at the outlet and 25 °C. (3) Measured over 0 ... 1.0 MPa with one atmosphere at the outlet and 25 °C.

Process and environment

Item	Value
Process connection	Rc1/2 · G1/2 · Rc3/4 · G3/4 · G1 · R1 · G1-1/2, by size
Working pressure	0 ... 1.0 MPa
Pressure resistance	1.5 MPa
Protection grade	IP40
Medium temperature	0 ... +50 °C · no dew and no ice
Ambient temperature	0 ... +50 °C · storage –10 ... +60 °C
Humidity	35 ... 85 % RH, no dew · in operation and in storage
Insulation	≥ 2 MΩ at 50 V DC between leads and plastic housing
Withstand voltage	250 V AC for one minute between leads and plastic housing
Vibration	1.5 mm or 10 g, 10 ... 55 ... 10 Hz per minute, two hours in each of the three axes
Shock	100 m/s² (10 g), three times in each of the three axes
EMC	IEC 61000-6-2 and IEC 61000-6-4
Weight	about 281.7 g for 500 and 1000 L/min · about 344 g for 2000 L/min, cable included

Electrical data and display

Item	Value
Supply voltage	12 ... 24 V DC ± 10 % · ripple ≤ 10 %
Consumption	≤ 50 mA
Switch outputs	two open collectors, NPN or PNP · 125 mA maximum · internal drop ≤ 1.5 V · short-circuit protected
Switch modes	differential, window, cumulative flow, cumulative flow pulse
Pulse	range / 6000 litres per pulse, or a set coefficient
Voltage output	1 ... 5 V · output impedance 1 kΩ
Current output	4 ... 20 mA · load ≤ 300 Ω
External input	no-voltage contact · ≤ 0.4 V · ≥ 30 ms
Communication	RS485
Cable	Ø 4 mm oil-resistant PVC · 26 AWG (0.15 mm²) · six cores · 2 m, moulded on
Display	colour LCD · can be turned by 180°
Shown	instantaneous flow, totalized flow, percentage of range, unit, two switch lamps
Instantaneous unit	1 L/min or 0.1 ft³/min
Totalized range / unit	99 999 999 L · 1 L or 1 ft³
Keys	set key and up/down keys

3.3 Versions

Code	Rated flow (L/min)	Display range	Connection	Bracket
01	2 ... 500	0 ... 525	Rc1/2 or G1/2	BT-27
02	5 ... 1000	0 ... 1050	Rc1/2 or G1/2	BT-27
03	10 ... 2000	0 ... 2100	Rc3/4 or G3/4	BT-28

3.4 Order code

Field	Code	Meaning
1 Series	QGKE	thermal gas flow sensor
2 Range	01 · 02 · 03 · 04 · 05	500 · 1000 · 2000 · 3000 · 6000 L/min
3 Output	SV · SA · SR	two switches + 1 ... 5 V · + 4 ... 20 mA · + RS485
4 Connection	R12K · G12K	Rc1/2 · G1/2 - up to 1000 L/min
	R34K · G34K	Rc3/4 · G3/4 - up to 2000 L/min
	R1K · G1K	R1 · G1 - up to 3000 L/min
	G112K	G1-1/2 - up to 6000 L/min
5 Bracket	– · BT-27 · BT-28 · BT-29 · BT-30	none · up to 1000 · up to 2000 · up to 3000 · up to 6000 L/min

Example: QGKE-01-SV-R12K. The connection and the bracket follow the flow range; the bracket is optional.

4 Dimensions

■Joint aperture ： Rc½, G½

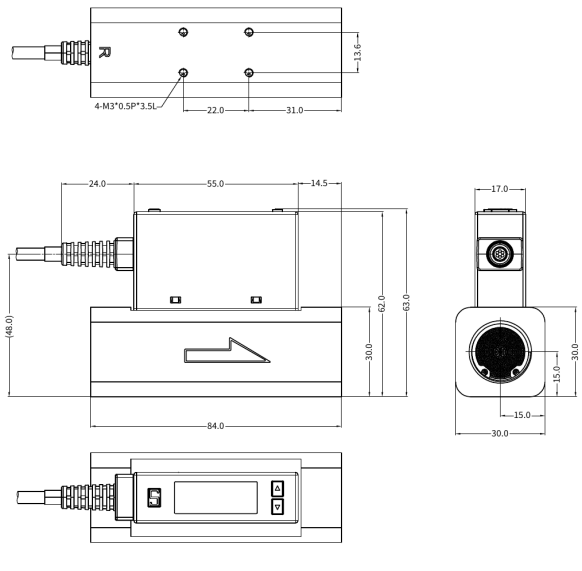

■Joint aperture : Rc¾, G¾

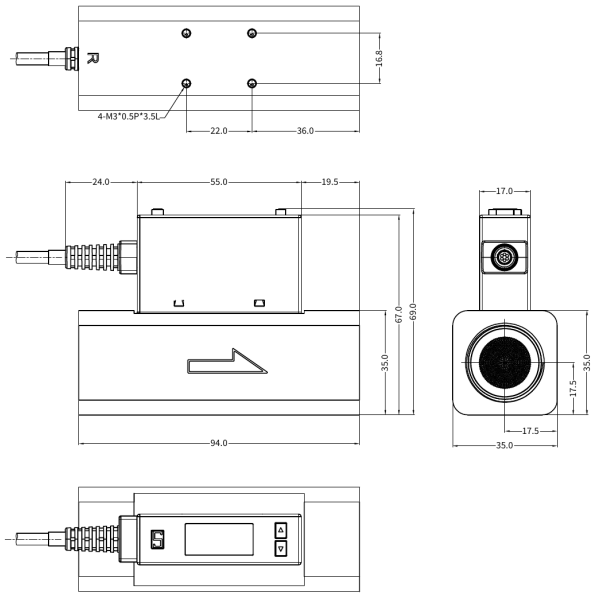

Left Rc1/2 and G1/2 (500 and 1000 L/min), right Rc3/4 and G3/4 (2000 L/min). Dimensions in mm.

Version	Length	Width	Height	Head width	Axis height	Mounting
Rc1/2 · G1/2 · 500 and 1000 L/min	84.0	30.0	63.0	17.0	15.0	4 × M3 × 0.5, 3.5 deep
Rc3/4 · G3/4 · 2000 L/min	94.0	35.0	69.0	17.0	17.5	4 × M3 × 0.5, 3.5 deep

The length is measured over the connections, the width and the height over the body with the head, the axis height from the base to the centre of the bore.

■3000L/min

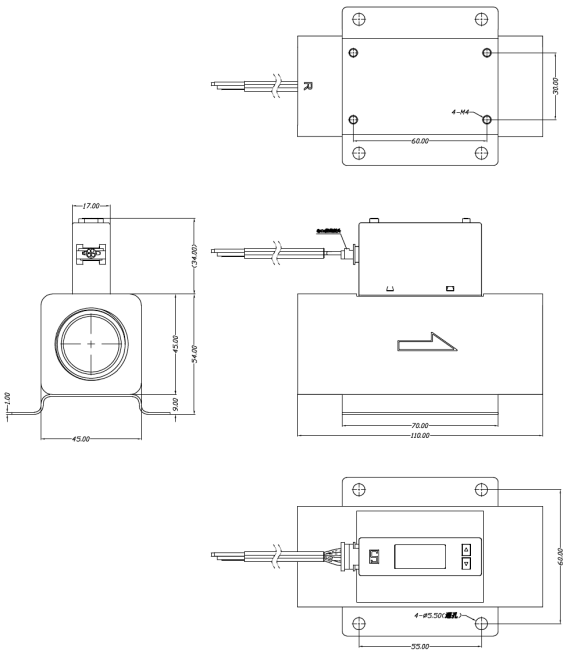

■6000L/min

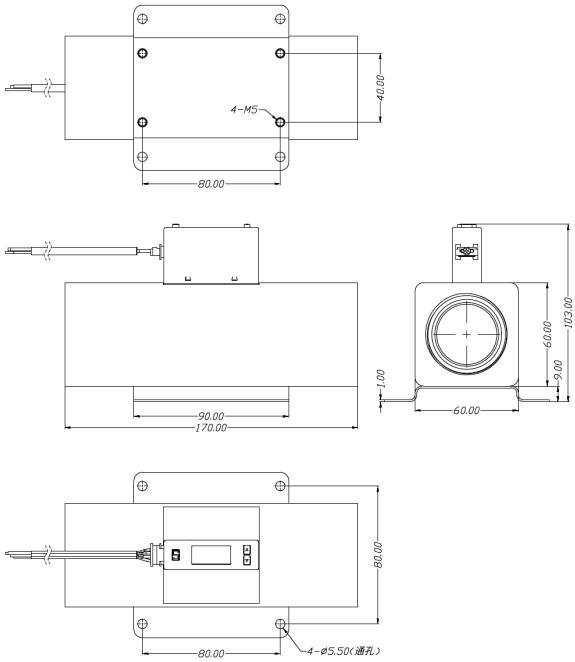

Left 3000 L/min, right 6000 L/min. Dimensions in mm.

4.1 Mounting brackets

■Fixed frame BT-27 (flow range ⩽1000L/min)

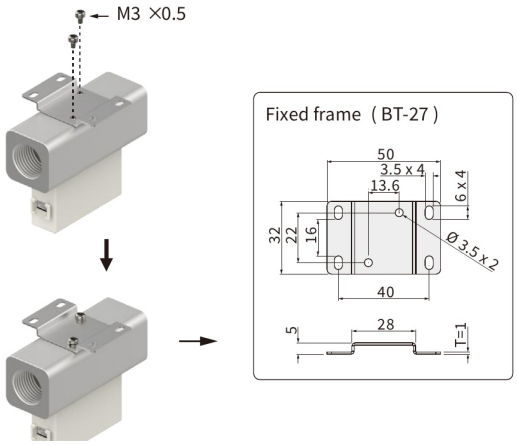

■Fixed frame BT-28 (flow range ⩽2000L/min)

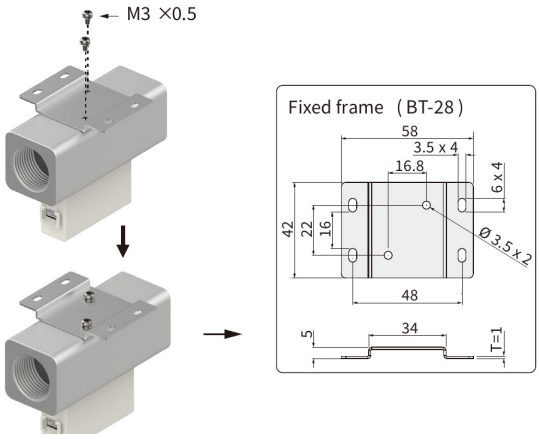

Brackets BT-27 (up to 1000 L/min) and BT-28 (up to 2000 L/min).

BT-27: 50 × 32 mm, 40 mm hole spacing; BT-28: 58 × 42 mm, 48 mm hole spacing; both 1 mm thick and fastened with two M3 × 0.5 screws. BT-29 (up to 3000 L/min) and BT-30 (up to 6000 L/min) are available as the fifth field of the order code.

5 Installation

5.1 Piping

- Arrange the pipes in accordance with the flow direction of the gas and the arrow on the body.
- Install a straight pipe of 8 cm or more with an inner diameter of 9 mm or more on the IN side. Bends in the piping or changes in cross-section may change the accuracy by ± 2 % F.S.
- Do not discharge the gas from the OUT side directly into the atmosphere without piping; this affects the accuracy.

Tightening torque

When piping a metal body, observe the applicable torque in the table below. Hold the body with a spanner while tightening the fitting. A torque above the table value may damage the product; an insufficient torque may let the thread loosen and cause leakage.

Connection thread	Applicable torque
Rc1/2″, G1/2″	28 … 30 N·m
Rc3/4″, G3/4″	28 … 30 N·m

After installation, admit gas and connect the power supply. Carry out a function check and a leak test to verify that the installation is correct.

5.2 Mounting

Fasten the sensor with the four M3 × 0.5 threaded holes in the base (section 4) or with the mounting bracket. The bracket is fastened with two M3 × 0.5 screws.

6 Electrical connection

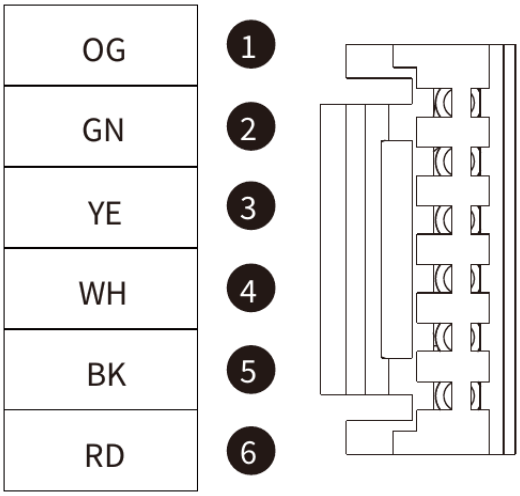

The six cores of the moulded cable with their pin numbers.

Core	Pin	SV · two switches + 1 ... 5 V	SA · two switches + 4 ... 20 mA	SR · two switches + RS485
RD	6	supply +	supply +	supply +
OG	1	supply –	supply –	supply –
BK	5	SP1 switch (OUT1) · PNP by default, NPN	SP1 switch (OUT1) · PNP by default, NPN	RS485 (A)
WH	4	SP2 switch (OUT2) · PNP by default, NPN	SP2 switch (OUT2) · PNP by default, NPN	RS485 (B)
YE	3	not used	not used	SP1 switch (OUT1) · PNP by default, NPN
GN	2	analogue 1 ... 5 V	analogue 4 ... 20 mA	SP2 switch (OUT2) · PNP by default, NPN

Wire colours to IEC 60757: RD red, OG orange, BK black, WH white, YE yellow, GN green.

Important In the SR version the two switches are on the yellow and the green core, because black and white carry the RS485 pair. A cable connected for one version therefore does not fit another.

Supply 12 ... 24 V DC ± 10 %. Switch outputs: open collector, 125 mA maximum, short-circuit protected; PNP or NPN is set in the menu (PNP/NPN Set). Current output: load ≤ 300 Ω; voltage output: output impedance 1 kΩ.

7 Operation

7.1 Display and keys

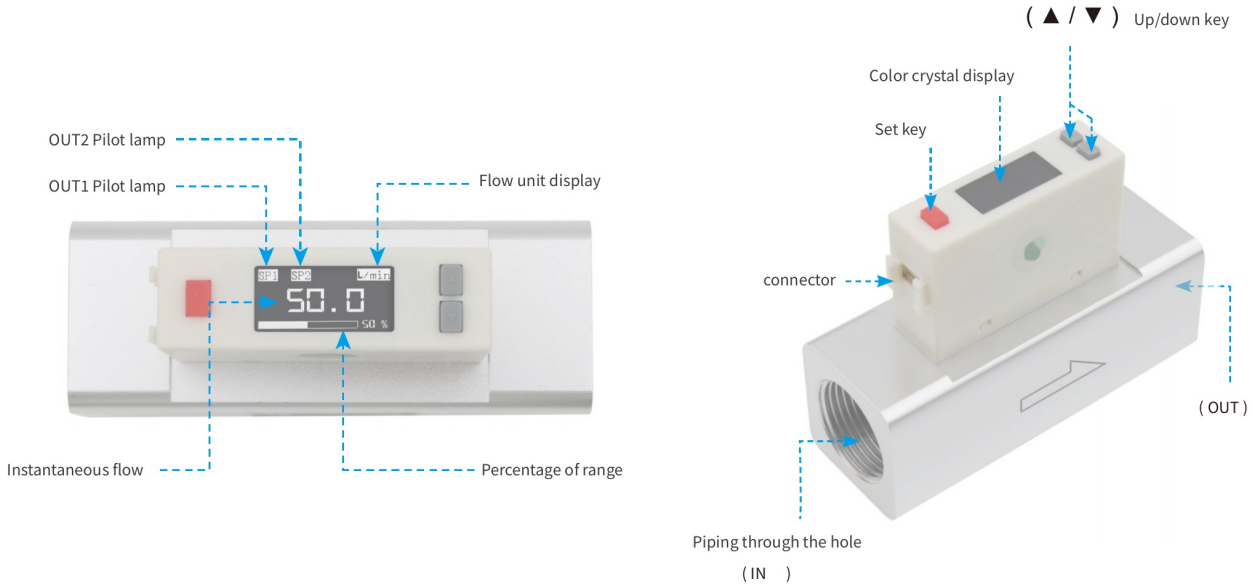

Display with the two output lamps, instantaneous flow, unit and percentage of range; set key (red), up and down keys.

Element	Function
Main display	output 1 and output 2 signal lamps, flow direction, instantaneous flow, flow unit, percentage of range
Auxiliary display	cumulative flow and its unit (e.g. **V:** ... **m3**)
Set key S	confirm / save; opens the menu and switches between parameter and value
Up key ▲	increase; in the main display: switch to the auxiliary display; in the menu: next item
Down key ▼	decrease; in the menu: previous item; double-click: turn the display by 180°

7.2 Switching function

When the flow rises above or falls below the set switching limits (SP, rP), the switching state of the output changes. The following switching functions can be selected:

Function	Description
Hysteresis, normally open / normally closed	First set the switch point SP, then the reset point rP. The difference between SP and rP is the hysteresis; if SP is changed again, the hysteresis changes with it.
Window, normally open / normally closed	SP is the upper limit value, rP the lower limit value. The width of the window is set by the difference between SP and rP.

OUT1 can also be set to pulse output (**Hz-OUT**); OUT2 offers the switching functions only.

7.3 Menu navigation

- From the main display press S to open menu 1.
- ▲ and ▼ move to the next or previous menu item.
- S opens the value of the item; change it with ▲ or ▼ and confirm with S.
- At **Menu 2 Set** press S to open menu 2, or ▲ to return to the main display.
- After the last item of menu 2, ▲ returns to the main display.
- **Factory Reset**: press and hold the key for 5 s (display **5S**) to restore the factory settings.

7.4 Menus of the SV and SA versions

Menu 1

Display	Function	Factory setting
SP1 Set	switch 1 set value	20 % of full scale
RP1 Set	switch 1 reset value	SP1 – 0.5
SP2 Set	switch 2 set value	80 % of full scale
RP2 Set	switch 2 reset value	SP2 – 0.5
F-URV	range	–
Menu 2 Set	enter menu 2	–

Menu 2

Display	Function	Factory setting
Factory Reset	restore the factory settings	–
OUT1 Set	OUT1 output mode: **H-NO** hysteresis normally open, **H-NC** hysteresis normally closed, **W-NO** window normally open, **W-NC** window normally closed, **Hz-OUT** pulse output	**H-NO**
OUT2 Set	OUT2 output mode: **H-NO**, **H-NC**, **W-NO**, **W-NC**	**H-NO**
ds1 Set	switch 1 output delay	0.0 s
dR1 Set	switch 1 reset delay	0.0 s
ds2 Set	switch 2 output delay	0.0 s
dR2 Set	switch 2 reset delay	0.0 s
Unit Set	unit	L/min
PNP/NPN Set	switch output PNP or NPN	PNP
F-C-data	flow coefficient	1.00
F-ofst	flow offset	0.0
F-PACE	filter damping	0.5
Low flow cut	low flow cut-off	–
PE-Mode	pulse coefficient (litres per pulse)	1.00 L/pulse
d-P-set	decimal places	0.0
K-INIT	initialisation delay	0.0
Digit colour	colour of the main value	–
BG colour	background colour	–
out 0 colour	colour for logic 0	red
out 1 colour	colour for logic 1	green
SCRN-Set	screen off	NO

7.5 Menus of the SR version (RS485)

Menu 1

Display	Function	Factory setting
SP1 Set	switch 1 set value	20 % of full scale
RP1 Set	switch 1 reset value	SP1 – 0.5
SP2 Set	switch 2 set value	80 % of full scale
RP2 Set	switch 2 reset value	SP2 – 0.5
F-URV	range	–
485 ID	RS485 address	1
Baud set	baud rate	9600
parity set	parity	None
Stop bit set	stop bits	1 bit
Menu 2 Set	enter menu 2	–

Menu 2

Display	Function	Factory setting
Factory Reset	restore the factory settings	–
OUT1 Set	OUT1 output mode: **H-NO**, **H-NC**, **W-NO**, **W-NC**, **Hz-OUT**	**H-NO**
OUT2 Set	OUT2 output mode: **H-NO**, **H-NC**, **W-NO**, **W-NC**	**H-NO**
ds1 Set · dR1 Set	switch 1 output delay · reset delay	0.0 s
ds2 Set · dR2 Set	switch 2 output delay · reset delay	0.0 s
Unit Set	unit	L/min
PNP/NPN Set	switch output PNP or NPN	PNP
F-C-data	flow coefficient	1.00
F-ofst	flow offset	0.0
F-PACE	filter damping	0.5
Low flow cut	low flow cut-off	–
Fi-C-set	filter coefficient	10.0
d-P-set	decimal places	0.0
Digit colour	colour of the main value	–
BG colour	background colour	–
SCRN-Set	screen off	NO
PE-Mode	pulse coefficient (litres per pulse)	1.00 L/pulse

8 Serial interface (SR version)

The SR version communicates over RS485 with the MODBUS RTU protocol as a slave in master-slave query mode.

8.1 Communication parameters

Item	Value
Protocol	MODBUS RTU, slave
Byte format	1 start bit, 8 data bits (least significant bit first), no parity, 1 stop bit; without parity, 1 or 2 stop bits can be set
Baud rate	2400 · 4800 · 9600 · 14400 · 19200 · 28800 · 115200 (factory setting 9600)
Address	1 … 255 (factory setting 1); broadcast address 0 is not supported
Frame	address 8 bit · function code 8 bit · data n × 8 bit · CRC 16 bit; frames separated by an idle time of at least 3.5 characters, gaps within a frame at most 1.5 characters
Polling	interval > 100 ms; wait 100 ms after reading one sensor before reading the next; read at most 7 registers

8.2 Function codes

Code	Function
03	read holding registers (start address 0 … 6, count 1 … 7)
06	write a single holding register

8.3 Registers

Address (dec / hex)	MODBUS address	Data type	Meaning
0 / 0x0000	40001	16-bit unsigned	instantaneous flow rate
1 / 0x0001	40002	32-bit unsigned (1 + 2)	cumulative flow, integer part (m³)
3 / 0x0003	40004	32-bit unsigned (3 + 4)	cumulative flow, fractional part (value × 0.000001 m³)
5 / 0x0005	40006	16-bit unsigned	unit of the displayed value (0: L/min; 1: m³/h)
6 / 0x0006	40007	16-bit unsigned	decimal places of the displayed value

32-bit values: high word first, each word high byte first. Cumulative flow = integer part + fractional part × 0.000001 m³.

8.4 Examples

Task	Request (hex)
read all 7 registers of the sensor with address 1	01 03 00 00 00 07 04 08
clear the cumulative flow: write 1 to register 1	01 06 00 01 00 01 19 CA

The sensor answers the write command with the same frame. Example of a reading: register 0 = 0x002B (43) → 43 L/min with 0 decimal places; registers 1 + 2 = 0x00000012 (18) and registers 3 + 4 = 0x0000472F (18223) → cumulative flow 18.018223 m³.

For a test with a MODBUS master program: slave ID 1, function 03, address 0, quantity 7; serial port with 9600 Bd, 8 data bits, no parity, 1 stop bit, RTU mode.

9 Maintenance and removal

9.1 Maintenance and cleaning

The device does not require maintenance.

Warning Periodically check whether the device is working properly. If it does not work properly, stop the operation immediately.

Caution Use of an improper cleaning agent may damage the device.

The following cleaning agents can be used to clean polycarbonate:

- mild soap or detergent
- isopropyl alcohol

Immediately after cleaning, rinse with water. Do not leave cleaner on the surface of the product. Do not clean the product in high heat or in direct sunlight.

The following cleaning agents are known to affect the integrity of polycarbonate components and must not be used:

- ZEP Fast 505, Pinesol, Formula 409
- halogenated solvents (benzene, gasoline, acetone or carbon tetrachloride)
- strong alkalis
- methyl ethyl ketone
- abrasive substances

9.2 Removal

Danger Only remove the device when it is de-energised and depressurised (electrical, hydraulic/pneumatic). Disconnecting the device from pressure and power supply must be carried out by trained or instructed personnel in accordance with the state of the art.

Warning Be aware that the surface of the housing may become very hot at higher operating temperatures.