OCTOGON

MANUAL

QEKJ

VORTEX FLOW AND TEMPERATURE SENSOR

Operating instructions



Document	Version	Date	Applies to
Operating instructions	V00x	11/2026	QEKJ, all sizes and versions

This manual describes the QEKJ vortex flow and temperature sensor: safety, technical data, dimensions, electrical connection, installation, operation with display, settings of the RS485 version, the magnet functions of the version without display, maintenance and removal.

octogon GmbH · Roseggerstrasse 16 · 8700 Leoben · Austria · office@octogon.org

www.octogon.org

Contents

1 About this manual ... 2
1.1 Signal words ... 2
1.2 Versions covered ... 3
2 Safety ... 3
2.1 Intended use ... 3
2.2 Disposal ... 3
3 Product description ... 3
3.1 Working principle ... 3
3.2 Device overview ... 3
3.3 Technical data ... 3
4 Dimensions ... 4
4.1 Bracket ... 5
5 Electrical connection ... 6
5.1 Pin assignment ... 6
5.2 Outputs ... 6
6 Installation ... 6
6.1 Piping ... 6
6.2 Straight pipe sections ... 7
6.3 Regulating valve ... 7
7 Operation (version with display) ... 8
7.1 Keys and screens ... 8
7.2 Menu 1 ... 8
7.3 Menu 2 ... 8
7.4 Output modes ... 9
8 RS485 version (R, RL) ... 9
9 Version without display: magnet functions ... 9
10 Maintenance, cleaning and removal ... 10
10.1 Maintenance and cleaning ... 10
10.2 Removal ... 10

1 About this manual

Read this manual before installing and commissioning the device and keep it available for later use. Device data in this manual refer to the QEKJ data sheet.

1.1 Signal words

Safety instructions protect users from dangerous situations and/or prevent material damage. The severity of the potential risk is indicated by the following signal words:

Signal word	Meaning
Danger	Imminent danger to the user. Failure to comply may result in fatal injury.
Warning	Identifiable hazard. Failure to comply may result in fatal injury and in damage to equipment or plant parts.
Caution	Danger. Failure to comply may result in minor injury and in material damage to the switch and/or the plant.
Important	Information that is important to the user.

1.2 Versions covered

Feature	Versions (field of the order code)
Size (2)	004A ... 400B: seven ranges from 0.5 ... 4 L/min to 150 ... 400 L/min, thread G3/8 ... G2 (chapter 4)
Thread (3)	GK G internal thread · RK R internal thread · NK NPT internal thread
Electrical (4)	M: M8x1 connector, 4-pin · moulded cable 2 m as standard, other lengths on request
Temperature (5)	– without · T with temperature measurement
Output (6)	without display: – analogue 4 ... 20 mA · V analogue 1 ... 5 V · S IO-Link / pulse frequency · R RS485; with display: A2 · V2 · SA · SV · S2 · RL (chapter 5)
Valve (7)	– without · F with straight-through regulating valve (only up to 40 L/min)
Bracket (8)	– without · T with bracket
Basic type	FTS520

Example: QEKJ-004A-GK-M-T-SA-F-T. A dash in the fields 5, 7 and 8 means "without".

2 Safety

2.1 Intended use

The QEKJ measures the flow of liquids and gases (such as cooling water, circulating water, organic and inorganic solutions, oxygen, nitrogen, ammonia, natural gas) by vortex shedding and, with option T, the medium temperature. It is intended for use within the limits given in section 3.3 (pressure level, medium and ambient temperature).

Important The products are developed and made as automatic control components for the manufacturing industry and are not suitable outside it. They cannot be used for transactions or certifications under the metrology laws of any country.

2.2 Disposal

Switches must be handled properly in accordance with national or local regulations for electrical and electronic equipment. Switches must not be disposed of with household waste.

3 Product description

3.1 Working principle

The device counts the vortices shed behind a bluff body. It has no moving parts, and the reading is not affected by the static pressure in the pipe. The flow curve is linearised with five points; the totalised flow is shown on the display.

3.2 Device overview

Version	Elements
Without display	two indicators: POWER and FLOW
With display	screen (can be turned by 180°), keys +, M and –; main screen and auxiliary screen (chapter 7)

3.3 Technical data

Item	Value
Measuring principle	vortex shedding
Flow range	0.5 ... 400 L/min in seven sizes (chapter 4)
Flow accuracy	< ± 3.0 % of full scale
Repeatability	< 2.0 %
Temperature range	0 ... 100 °C (option T)
Temperature accuracy	≤ 2.0 °C
Linearisation	5-point flow curve
Media	liquids and gases · cooling water, circulating water, organic and inorganic solutions, oxygen, nitrogen, ammonia, natural gas
Wetted material	PPS below 100 L/min · PA66 above 100 L/min · stainless steel 304

Item	Value
Medium temperature	–20 … +90 °C
Ambient temperature	–10 … +65 °C
Pressure level	10 bar · maximum 16 bar
Process connection	G3/8 … G2 internal thread · G, R or NPT
Mounting	bracket in seven sizes · regulating valve up to 40 L/min
Analogue output	4 … 20 mA or 1 … 5 V · up to two channels · three-wire · load up to 500 Ω
Switching output	PNP or NPN · 24 V DC / 200 mA · flow and temperature
Pulse output	up to 1 kHz · original frequency or linear frequency, 100 Hz at full scale · scaling on request
Digital interface	IO-Link · RS485
Wiring	M8x1 connector, 4-pin · moulded cable 2, 5 or 10 m
Display	option – blind version or version with display; instantaneous flow, totalised flow, temperature and frequency

4 Dimensions

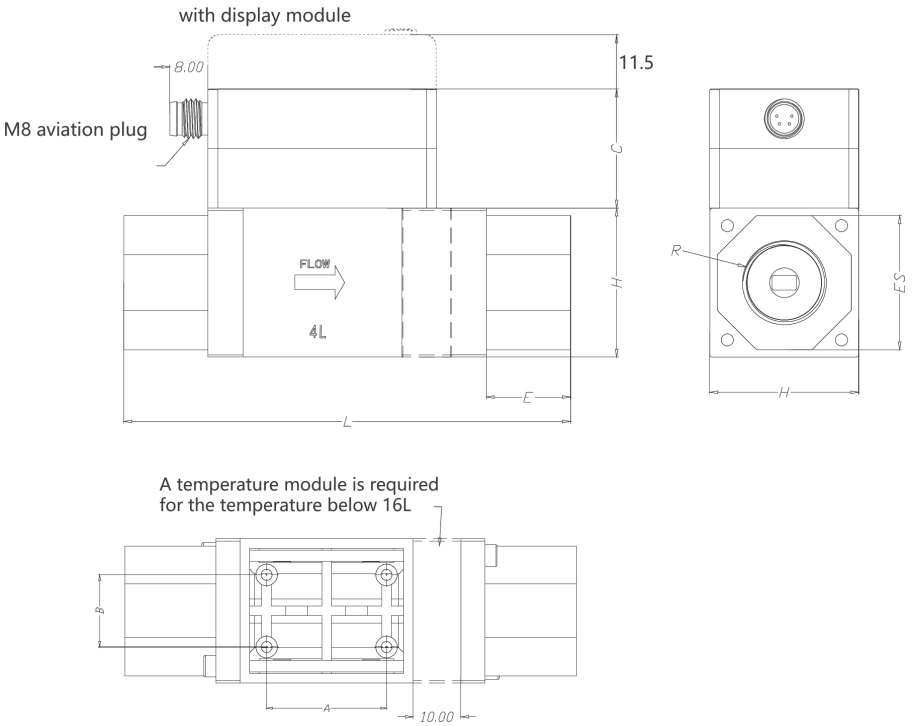

Size 004 with display, with and without the temperature module. C = height of the shell above the body, H = body height and width, L = overall length, E = lock bit, A and B = position of the mounting holes. Lower view: temperature module (needed for the temperature measurement up to 16 L/min).

Size	Thread G	H (mm)	L (mm)	C (mm)	A x B (mm)	E (mm)	Range (L/min)
004A	3/8″ · 15 mm	30 x 30	78 · 88 with temp.	24	25 x 15	17	0.5 … 4
004B	1/2″ · 15 mm	30 x 30	78 · 88 with temp.	24	25 x 15	17	0.5 … 4
016A	3/8″ · 15 mm	30 x 30	84 · 94 with temp.	24	25 x 15	19	2 … 16
016B	1/2″ · 15 mm	30 x 30	84 · 94 with temp.	24	25 x 15	19	2 … 16
040A	1/2″ · 15 mm	40 x 40	110	20	40 x 15	18	5 … 40
040B	3/4″ · 15 mm	40 x 40	110	20	40 x 15	18	5 … 40
100A	3/4″ · 20 mm	45 x 45	120	20	40 x 20	23	10 … 100
100B	1″ · 20 mm	45 x 45	120	20	40 x 20	23	10 … 100
200A	1-1/4″ · 20 mm	58 x 58	114	22	32 x 31	22	20 … 200
200B	1-1/2″ · 20 mm	58 x 58	114	22	32 x 31	22	20 … 200
250A	1-1/4″ · 20 mm	58 x 58	114	22	32 x 31	22	50 … 250
250B	1-1/2″ · 20 mm	58 x 58	114	22	32 x 31	22	50 … 250
400A	1-3/4″ · 25 mm	65 x 65	130	22	32 x 31	30	150 … 400
400B	2″ · 25 mm	65 x 65	130	22	32 x 31	30	150 … 400

Thread G with thread engagement. The M8x1 connector adds 8 mm. Spanner flats across the process connection: ES 27 for the sizes 004 and 016, ES 34 for 040, ES 41 for 100, H 58 for 200 and 250, H 65 for 400.

4.1 Bracket

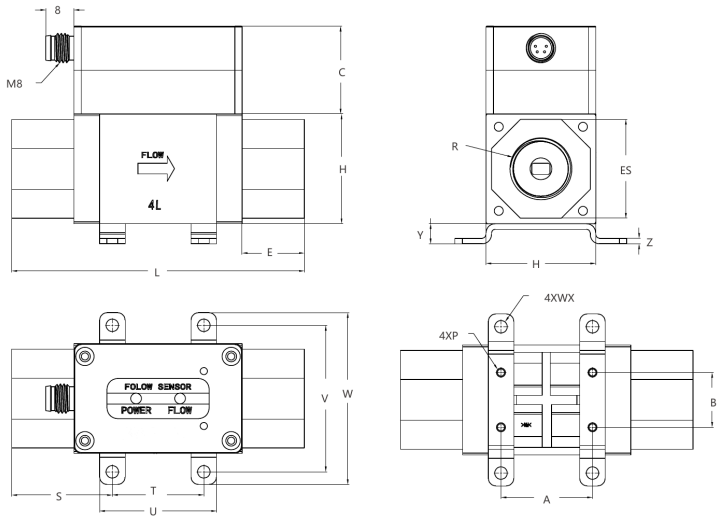

Device on its bracket, size 004. T x V = spacing of the bracket mounting holes, W x U = outline of the bracket, Y = height, Z = plate thickness, S = margin.

Bracket for size	T x V (mm)	W x U (mm)	Lock screw	Hole Ø (mm)	S (mm)
004	25 x 40	47 x 32	M2.5 x 10 deep	3.5	28
016	25 x 40	47 x 32	M2.5 x 10 deep	3.5	30
040	40 x 50	60 x 49	M4 x 10 deep	4.5	35
100	40 x 55	65 x 49	M4 x 10 deep	4.5	40
200	32 x 68	78 x 41	M4 x 10 deep	4.5	41
250	32 x 68	78 x 41	M4 x 10 deep	4.5	41
400	32 x 75	85 x 41	M4 x 10 deep	4.5	49

Height Y is 5.5 mm and plate thickness Z is 1.5 mm on all seven brackets.

5 Electrical connection

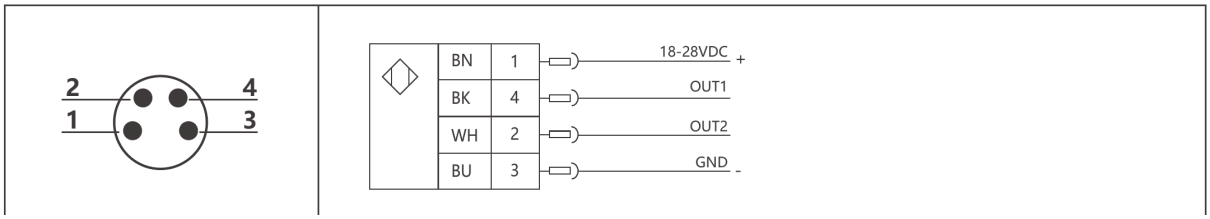

M8x1 connector seen on its pins (left) and basic wiring (right).

5.1 Pin assignment

Wire	Pin	Function
BN	1	supply + (18 … 28 V DC, see connection diagram)
BU	3	supply –
BK	4 (OUT1)	output 1 – depends on the output code
WH	2 (OUT2)	output 2 – depends on the output code

5.2 Outputs

Output code	OUT1 · BK · pin 4	OUT2 · WH · pin 2
A2	flow 4 … 20 mA (factory default) · temperature 4 … 20 mA	temperature 4 … 20 mA (factory default) · flow 4 … 20 mA
V2	flow 1 … 5 V (factory default) · temperature 1 … 5 V	temperature 1 … 5 V (factory default) · flow 1 … 5 V
SA	flow switch PNP (factory default) or NPN · temperature switch PNP or NPN · original frequency · linear frequency (100 Hz at full scale) · IO-Link	flow 4 … 20 mA (factory default) · temperature 4 … 20 mA
SV	as SA	flow 1 … 5 V (factory default) · temperature 1 … 5 V
S2	as SA	flow switch PNP (factory default) or NPN · temperature switch PNP or NPN
R · RL	RS485 (A)	RS485 (B)

The same four cores carry every version; which output is fitted is set by the output code and, within that, by the factory setting (changed in the menu, chapter 7). The temperature entries apply only to devices with the temperature option T. A2 and V2 are offered only together with option T.

6 Installation

6.1 Piping

– When piping the device, apply the wrench only to the metal parts (pipe fittings) that are integrated with the piping part. A wrench applied to other parts may damage the flow switch.
– Never apply a spanner to the connector, otherwise the connector may be damaged.
– Do not let sealing tape get into the pipe.
– Tighten the connection so that it does not loosen and cause leakage.

Caution Tightening outside the torque range may damage the switch. If the specified tightening torque is not applied, the threaded joint may loosen.

Thread	Applicable torque range	Torque safe range
G3/8	22 … 24 N·m	< 200 N·m
G1/2	28 … 30 N·m	< 200 N·m
G3/4	28 … 30 N·m	< 200 N·m
G1	36 … 38 N·m	< 200 N·m
G1-1/4	40 … 42 N·m	< 250 N·m
G1-1/2	48 … 50 N·m	< 250 N·m

For the threads G1-3/4 and G2 (size 400) no tightening torque is specified; please ask.

6.2 Straight pipe sections

Provide straight pipe sections upstream and downstream of the sensor (DN = nominal pipe diameter):

Upstream of the sensor	Upstream	Downstream
Concentric contraction, fully open valve	15 DN	5 DN
One 90° bend	20 DN	5 DN
Two 90° bends in the same plane	25 DN	5 DN
Two 90° bends in different planes	40 DN	5 DN
Concentric expansion	30 DN	5 DN
Regulating valve half open (not recommended)	50 DN	5 DN

6.3 Regulating valve

With option F the straight-through regulating valve sits in the same body as the sensor (only up to 40 L/min). The valve is set by hand with the knurled cap; the sensor reads the flow through it. Dimensions: see the data sheet.

7 Operation (version with display)

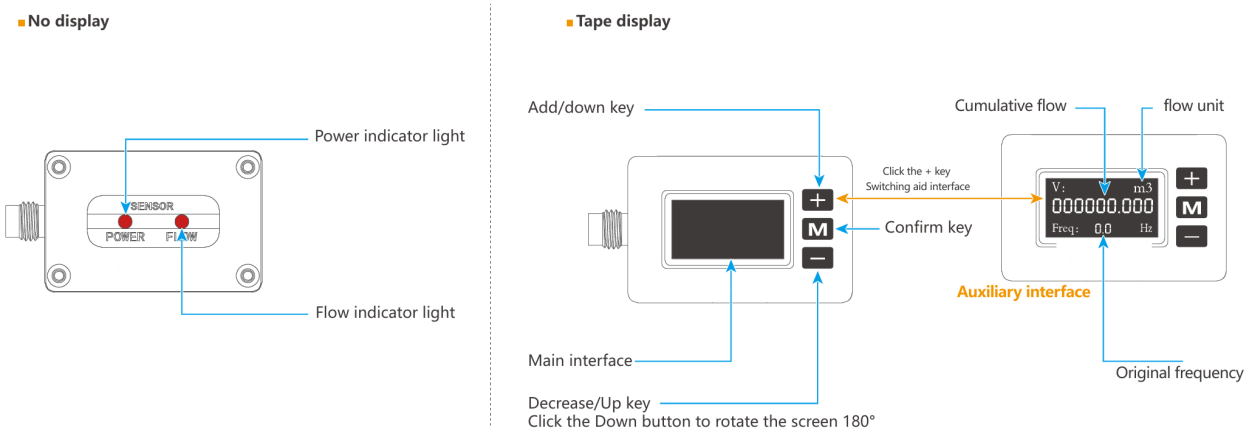

Left: version without display with POWER and FLOW indicators. Right: version with display, main screen and auxiliary screen.

7.1 Keys and screens

Key / screen	Function
+	switch from the main screen to the auxiliary screen; in the menu: move between items, change values
M	confirm key: open the menu, open and confirm a menu item
–	turn the screen by 180°; in the menu: move between items, change values
Main screen	instantaneous flow, flow unit, current temperature (option T), switching value or analogue quantity
Auxiliary screen	cumulative flow, flow unit, original frequency

7.2 Menu 1

Press M on the main screen to open menu 1. Move between the items with + and –, open an item with M, change the value with + and – and return with M.

Menu	Function
SP1 Set	switch 1 set value (factory default: 20 % of full scale)
rP1 Set	switch 1 reset value (factory default: SP1 – 0.5)
T-LRV	temperature lower limit (factory default: 0.0)
T-URV	temperature upper limit (factory default: 100.0)
F-URV	flow range
Menu 2 Set	open menu 2 or return to the main screen

7.3 Menu 2

Menu	Function
Factory Reset	restore the factory settings: press and hold for 5 seconds as prompted on the screen
Out1 Set	OUT1 output mode (section 7.4)
Out2 Set	OUT2 output mode (section 7.4)
ds1-Set	switch 1 output delay (factory default: 0.0)
dR1-Set	switch 1 reset time delay (factory default: 0.0)
T-Ofst	temperature offset (factory default: 0.0)
F-Ofst	flow coefficient correction
Unit Set	unit setting (factory default: L/min)
PNP/NPN Set	PNP/NPN setting (factory default: PNP)
F-L-data	historical minimum
F-H-data	historical maximum
F-PACE	filter damping (factory default: 0.5)
Low flow cut	low flow cut-off
d-P-set	decimal places (factory default: 0.0)
Digit colour	colour of the main reading

Menu	Function
BG colour	main background colour
SCRN-Set	screen-off setting (factory default: NO)

7.4 Output modes

The output modes available in **Out1 Set** and **Out2 Set** depend on the output code (section 5.2):

Display	Output mode
F-H-NO	flow, hysteresis function, normally open (factory default for switching outputs)
F-H-NC	flow, hysteresis function, normally closed
F-W-NO	flow, window function, normally open
F-W-NC	flow, window function, normally closed
F-Hz-OUT	flow pulse output (OUT1 only)
IOLink	IO-Link (OUT1 only)
T-H-NO · T-H-NC	temperature, hysteresis function, normally open · normally closed (option T)
T-W-NO · T-W-NC	temperature, window function, normally open · normally closed (option T)
F-4-20MA · T-4-20MA	analogue output 4 … 20 mA for flow · temperature
F-1-5V · T-1-5V	analogue output 1 … 5 V for flow · temperature

8 RS485 version (R, RL)

OUT1 (BK) carries RS485 (A), OUT2 (WH) RS485 (B). With display (RL) the main screen shows the instantaneous flow, the flow unit and the percentage of the range, with option T also the current temperature. The menus differ from chapter 7:

Menu 1	Function
485 ID	485 address (factory default: 1)
Baud Set	baud rate (factory default: 9600)
Parity Set	parity (factory default: None)
Stop bit Set	stop bits (factory default: 1 bit)
F-URV	range
Menu 2 Set	open menu 2

Menu 2 of the RS485 version: **Factory Reset**, **Unit Set**, **F-L-data**, **F-H-data**, **F-PACE**, **Low flow cut**, **T-Ofst**, **d-P-set**, **Digit colour**, **BG colour**, **SCRN-Set** – functions and factory defaults as in section 7.3.

Note The communication protocol (register assignment) is not part of this manual; please ask.

9 Version without display: magnet functions

On the analogue versions without display, zero cut-off, response speed and factory reset are set with a magnet. Place the magnet at the lower right corner of the plastic housing with the indicators and leave it there. Over 60 seconds the indicators run through the following sequence; removing the magnet during a phase selects its function. If the magnet is not removed, the function is skipped.

Time	Indicator (every 10 s)	Function when the magnet is removed
0 … 10 s	POWER flashes blue	cut off 50 Hz interference
10 … 20 s	POWER flashes red	cut off 60 Hz interference
20 … 30 s	POWER flashes green	cut off the current flow (flow reads zero when no liquid flows)
30 … 40 s	FLOW flashes blue	response speed 0.5 s (fast)
40 … 50 s	FLOW flashes green	response speed 2 s (medium)
50 … 60 s	FLOW flashes red	response speed 5 s (slow)
after 60 s	POWER and FLOW flash together	restore the factory settings

Use the zero cut-off when interference keeps the reading from returning to zero without flow. The factory default response time is 0.5 seconds.

10 Maintenance, cleaning and removal

10.1 Maintenance and cleaning

Warning Periodically check whether the switch is working properly. If the switch does not work properly, stop the operation immediately.

Caution Unsuitable cleaning agents may damage the switch.

The following cleaning agents can be used to clean polycarbonate: mild soap or detergent, isopropyl alcohol. Rinse with water immediately after cleaning. Do not leave cleaning agent on the surface of the product. Do not clean the product in high heat or in direct sunlight.

The following cleaning agents are known to affect the integrity of polycarbonate components and must not be used:

- ZEP Fast 505, Pinesol, Formula 409
- halogenated solvents (benzene, gasoline, acetone or carbon tetrachloride)
- strong alkalis
- methyl ethyl ketone
- abrasive substances

10.2 Removal

Danger Remove the switch only when it is depressurised and de-energised (electrical, hydraulic/pneumatic). Disconnecting the switch from pressure and power supply must be performed by trained or instructed personnel in accordance with the state of the art.

Warning The surface of the housing may become very hot at high operating temperatures.