OCTOGON

MANUAL

QEKH

FLOW, TEMPERATURE AND PRESSURE SENSOR

Operating instructions



Document	Version	Date	Applies to
Operating instructions	V00x	11/2026	QEKH, all nominal sizes and versions

This manual describes the QEKH combined flow, temperature and pressure sensor: safety, technical data, dimensions, electrical connection, installation, operation of the three output versions, the RS485 interface (Modbus RTU), maintenance and removal.

Contents

1 About this manual ... 2
1.1 Signal words ... 2
1.2 Versions covered ... 3
2 Safety ... 3
2.1 Intended use ... 3
2.2 Disposal ... 3
3 Product description ... 3
3.1 Function ... 3
3.2 Display and keys ... 3
3.3 Technical data ... 4
3.4 Order code ... 4
4 Dimensions ... 5
4.1 Threaded version ... 5
4.2 Flange version ... 5
5 Electrical connection ... 6
5.1 Cable sockets ... 6
6 Installation ... 6
7 Operation ... 7
7.1 Screens and keys ... 7
7.2 Settings of the analogue version (3A) ... 7
7.3 Settings of the switching version (S3) ... 7
7.4 Settings of the RS485 version (RS) ... 8
8 Serial interface (RS485) ... 8
8.1 Communication settings ... 8
8.2 Frame format ... 8
8.3 Registers ... 8
8.4 Function codes and examples ... 9
8.5 Commissioning with a Modbus master program ... 9
9 Maintenance, cleaning and removal ... 9
9.1 Maintenance and cleaning ... 9
9.2 Removal ... 9

1 About this manual

Read this manual before installing and commissioning the device and keep it available for later use. Device data in this manual refer to the QEKH data sheet.

1.1 Signal words

Safety instructions protect users from dangerous situations and/or prevent material damage. The severity of the potential risk is indicated by the following signal words:

Signal word	Meaning
Danger	Imminent danger to the user. Failure to comply may result in fatal injury.
Warning	Identifiable hazard. Failure to comply may result in fatal injury and in damage to equipment or plant parts.
Caution	Danger. Failure to comply may result in minor injury and in material damage to the sensor (switch) and/or the plant.
Important	Information that is important to the user.

1.2 Versions covered

Feature	Versions
Nominal size	DN15 ... DN250
Process connection	G or R internal thread, G or R external thread (up to DN50) · flange to GB 9119-2000, PN16 (from DN65 always flange)
Medium	liquid · gas
Body material	alumina ceramic · stainless steel 304
Medium temperature	standard –20 ... +80 °C · high temperature –30 ... +150 °C, –40 ... +200 °C, –40 ... +350 °C
Output	3A three analogue channels 4 ... 20 mA · S3 three switching outputs · RS RS485
Cold end	integrated, welded (up to 200 °C) · KT03 sleeve joint up to 200 °C, metal capillary 30 cm · KT10 sleeve joint up to 350 °C, metal capillary 100 cm
Basic type	FTS400

2 Safety

2.1 Intended use

The QEKH measures flow, temperature and pressure of liquids and gases in pipes at the same time - for example water, oil, solutions, steam, oxygen, nitrogen, ammonia or natural gas - and outputs them as analogue signals, switching signals or via RS485, depending on the version.

Danger Use the device only within the specified application range. The temperature must be within the permissible range. Do not exceed the rated pressure and the rated electrical load. Installation, commissioning and operation must be carried out in accordance with the applicable national and local safety regulations.

2.2 Disposal

Sensors (switches) must be handled correctly in accordance with national or local regulations for electrical and electronic equipment. Sensors (switches) must not be disposed of with household waste.

3 Product description

3.1 Function

The device measures flow, temperature and pressure at the same time. It has no moving parts, and the reading is not affected by the static pressure in the pipe. All values are shown on a colour display and output according to the output version.

3.2 Display and keys

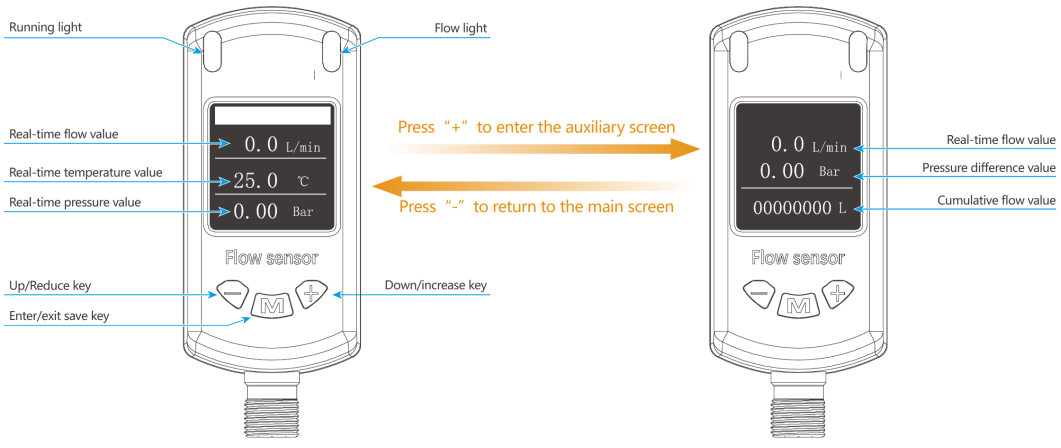

Left: main screen. Right: auxiliary screen.

Element	Function
Running light	operation indicator
Flow light	flow signal light
Main screen	real-time flow (L/min), temperature (°C) and pressure (bar)
Auxiliary screen	real-time flow, pressure difference and cumulative flow (eight digits, in litres)
– key	up / reduce; on the auxiliary screen: back to the main screen
M key	enter / exit and save
+ key	down / increase; on the main screen: to the auxiliary screen

3.3 Technical data

Item	Value
Flow range	0.4 … 12 500 L/min, depending on nominal size
Flow accuracy	< ± 2 % of full scale
Repeatability	< 2 % of the actual flow
Pressure range	0 … 1.0 MPa
Pressure accuracy	< ± 0.5 % of full scale
Temperature range	–20 … +80 °C
Temperature accuracy	< ± 1 °C
Nominal size	DN15 … DN250
Static pressure	the reading is not affected by the static pressure in the pipe
Media	liquids and gases · water, oil, solutions, steam, oxygen, nitrogen, ammonia, natural gas
Wetted material	alumina ceramic or stainless steel 304
Medium temperature	–20 … +80 °C · high-temperature versions –30 … +150 °C, –40 … +200 °C or –40 … +350 °C
Ambient temperature	–10 … +65 °C
Pressure grade	1.0 MPa · 1.6 MPa or 2.5 MPa on request
Process connection	G1/2 … G2 thread · flange DN15 … DN250 to GB 9119-2000
Straight pipe run	5 × DN before and 10 × DN after the device · from DN65 with flanges, 200 mm each
Supply voltage	18 … 30 V DC
Analogue output	3 × 4 … 20 mA, three-wire · flow, pressure and temperature · load up to 500 Ω
Switching output	three switches · flow, pressure and temperature
Digital interface	RS485
Alarm points	one each for flow, pressure and temperature, freely settable within the range
Wiring	M12 × 1 connector, 5-pin
Display	1.44″ colour TFT; main screen and auxiliary screen
Totalizer	eight digits, in litres
Setting	by the three keys –, M and +

3.4 Order code

Field	Code	Meaning
1 Series	QEKH	integrated flow, temperature and pressure sensor
2 Nominal size	015 … 250	DN15 … DN250, three digits (025 = DN25)
3 Range	04 … 2500	range code from the range table of the data sheet
4 Process	GK · RK · GM · RM · F	G / R internal thread, G / R external thread (up to DN50) · flange to the national standard, PN16, 1.6 MPa
5 Medium	L · G	liquid · gas
6 Body material	L · S	alumina ceramic · stainless steel 304
7 Temperature	— · G · G2 · G3	standard –20 … +80 °C · –30 … +150 °C · –40 … +200 °C · –40 … +350 °C
8 Output	3A · S3 · RS	three analogue channels 4 … 20 mA · three switching outputs · RS485
9 Cold end	— · KT03 · KT10	integrated, welded (up to 200 °C) · sleeve joint up to 200 °C, capillary Ø 6 mm, 30 cm · sleeve joint up to 350 °C, capillary Ø 6 mm, 100 cm

Example: QEKH-015-04-GK-L-S-—-3A-—. A high-temperature version must be ordered with the stainless steel body. All ranges are calibrated with water; for other liquids the density and the kinematic viscosity have to be given.

4 Dimensions

4.1 Threaded version

Pipe threaded connection

Normal form

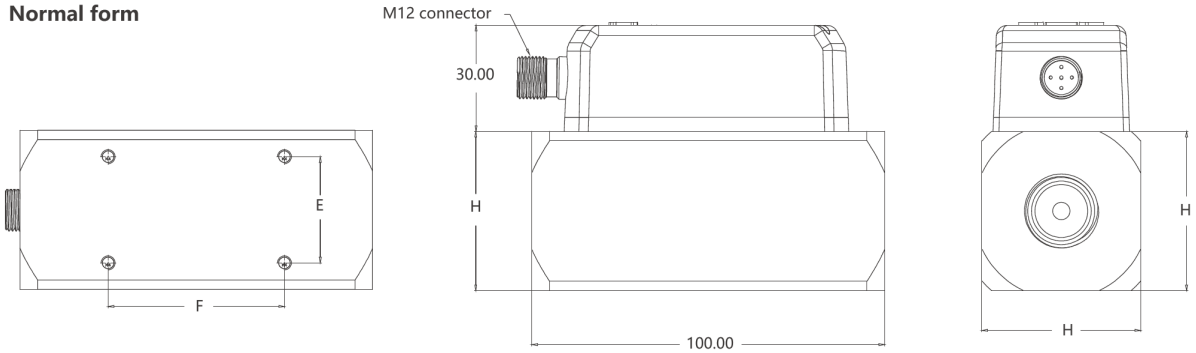

Threaded version: body 100 mm long, M12 × 1 connector 30 mm above the body. E × F = mounting hole spacing, H = body height. Dimensions in mm.

Nominal size	Process connection	Body height H (mm)	Fixing E × F (mm)
DN15	1/2″	45	35 × 50
DN20	3/4″	50	40 × 50
DN25	1″	55	45 × 50
DN32	1-1/4″	65	55 × 50
DN40	1-1/2″	70	60 × 50
DN50	2″	80	70 × 50

4.2 Flange version

Flange connection

≤150℃ High temperature type

Installation diagram

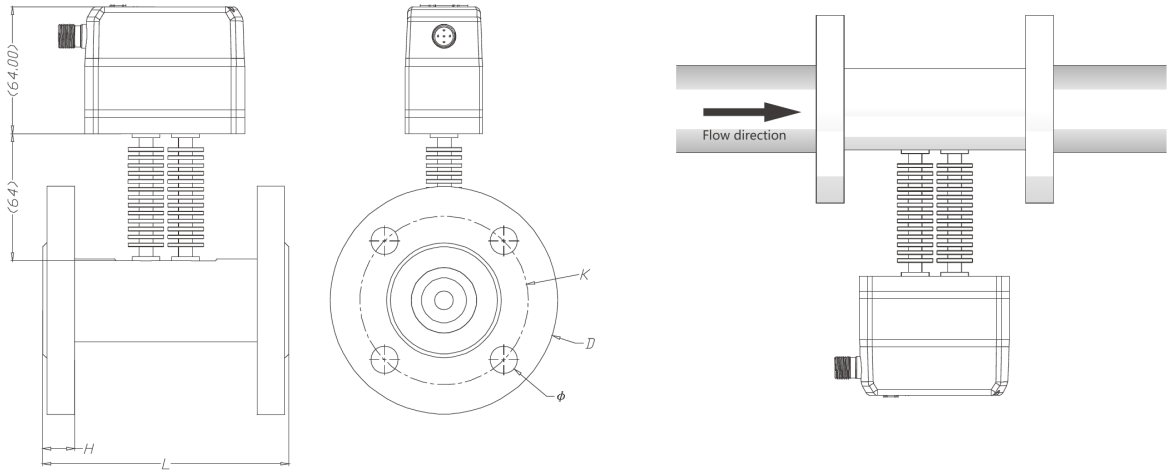

Flange version up to 150 °C with installation diagram. D = flange diameter, K = bolt circle, ϕ = hole diameter, H = flange thickness, L = body length.

Nominal size	Flange Ø D	Bolt circle K	Hole Ø	Holes N	Thickness H	Body length L
DN15	95	65	14	4	14	120
DN20	105	75	14	4	16	120
DN25	115	85	14	4	16	120
DN32	140	100	18	4	18	120
DN40	150	110	18	4	18	140
DN50	165	125	18	4	19	150
DN65	185	145	18	8	20	175
DN80	200	160	18	8	20	200
DN100	220	180	18	8	22	220
DN125	250	210	18	8	22	250
DN150	285	240	22	8	24	300
DN200	340	295	22	12	26	360
DN250	405	355	26	12	29	400

Dimensions in mm. Flanges to GB 9119-2000. The high-temperature versions (KT03 up to 200 °C, KT10 up to 350 °C) carry the pressure to the electronics through a metal cooling capillary of 30 cm or 100 cm, which keeps the electronics away from the hot pipe; their drawings are in the data sheet.

5 Electrical connection

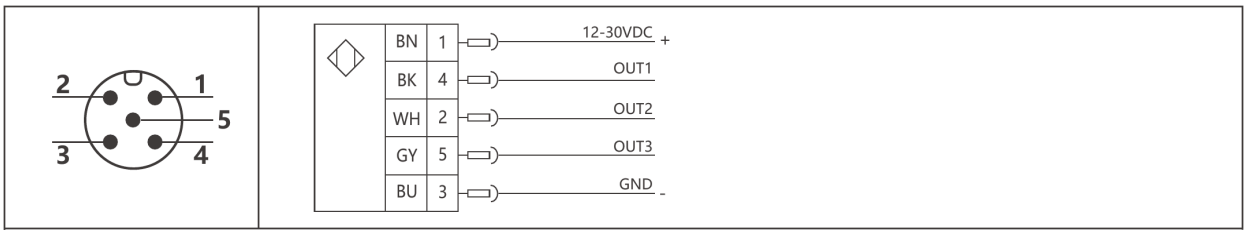

M12 × 1 connector, 5-pin. Supply voltage: see technical data (section 3.3).

The same five cores carry all three output versions; which version is fitted is set by field 8 of the order code. Wire colours: 1 BN brown, 2 WH white, 3 BU blue, 4 BK black, 5 GY grey.

Wire	Pin	3A · three analogue channels	S3 · three switches	RS · RS485
BN	1	supply +	supply +	supply +
BU	3	supply –	supply –	supply –
BK	4	OUT1 · pressure 4 … 20 mA	OUT1 · pressure switch	RS485 (B)
WH	2	OUT2 · temperature 4 … 20 mA	OUT2 · temperature switch	RS485 (A)
GY	5	OUT3 · flow 4 … 20 mA	OUT3 · flow switch	RS485 (GND)

5.1 Cable sockets

The factory standard is a moulded M12 × 1 socket, 5-pin, with 2 m PVC cable. Sockets are offered with 2, 5 or 10 m of polyurethane or PVC cable, straight or angled, and as connectors wired on site through a Pg7 or Pg9 gland. Use the 5-pin sockets. Accessories are ordered by description; please state the device order code with the enquiry.

6 Installation

- Install the device horizontally. The device is calibrated at the factory in the horizontal position.
- Vertical installation is not recommended; it affects the measurement accuracy.
- Observe the straight pipe runs: 5 × DN before and 10 × DN after the device (DN = inner diameter of the pipe). From DN65 the device is always supplied with flanges; then 200 mm of straight pipe are required before and after the device.
- Do not install valves in the outlet section after the device.
- Observe the direction of flow.

7 Operation

7.1 Screens and keys

– Main screen: flow, temperature and pressure. Press + to change to the auxiliary screen (flow, pressure difference, cumulative flow); press – to return to the main screen.
– Press M on the main screen to open the settings. The settings are arranged on pages of four items.
– Select an item and open or close it with M; change the value with + or –. The setting pages are passed with + (next page) and – (previous page); + on the last page returns to the main screen.
– The display language can be set to Chinese or English (last settings page).

7.2 Settings of the analogue version (3A)

Page	Setting	Values / note
1	zero cut-off	flow values below the set value are shown as zero
1	flow range	analogue range of the flow output
1	pressure range	analogue range of the pressure output
1	temperature range	selectable temperature range of the temperature output
2	density	density of the medium
2	temperature compensation	compensation value
2	damping time	damping of the display and outputs
2	refresh time	display refresh time
3	language	Chinese / English
3	unit	L/min · m^3/h
3	display angle	0° · 90° · 180° · 270°
3	display screen	on / off

7.3 Settings of the switching version (S3)

In this version the main screen also shows the states of the three switching outputs (OFF / ON). Page 1 lists output 1, output 2, output 3 and the extension; open an output with M:

Setting (per output)	Values / note
Mode	measured value of the output: flow · pressure · temperature
Output	switching function: hysteresis normally open (Hno) · hysteresis normally closed (Hnc) · window normally open (Fno) · window normally closed (Fnc)
Action	switch point SP
Reset	reset point rP

Page	Setting	Values / note
2 (extension)	zero cut-off	flow values below the set value are shown as zero
2 (extension)	factory data reset	restores the factory settings
2 (extension)	light 1	colour switch of the signal light on the left
2 (extension)	light 2	colour switch of the signal light on the right
3	language · unit · display angle · display screen	as in section 7.2

Switching functions

When the measured value rises above or falls below the set switching limits (SP, rP), the switching state changes:

Function	Behaviour
Hno / Hnc	Hysteresis function, normally open / normally closed. First set the switch point SP, then the reset point rP. If SP is changed again, the hysteresis changes with it.
Fno / Fnc	Window function, normally open / normally closed. SP = upper limit, rP = lower limit; the width of the window is the difference between SP and rP.

7.4 Settings of the RS485 version (RS)

Page	Setting	Values / note
1	zero cut-off	flow values below the set value are shown as zero
1	factory data reset	restores the factory settings
1	address	sensor address 1 … 250, factory default 1
1	baud rate	2400 · 4800 · 9600 · 19200 · 115200 bit/s, factory default 9600
2	density · temperature compensation · damping time · refresh time	as in section 7.2
3	language · unit · display angle · display screen	as in section 7.2

8 Serial interface (RS485)

8.1 Communication settings

The RS485 version communicates with the Modbus RTU protocol in master-slave query mode.

Parameter	Value
Protocol	Modbus RTU
Byte format	1 start bit, 8 data bits (least significant bit first), no parity, 1 stop bit - fixed
Baud rate	2400 · 4800 · 9600 · 19200 · 115200 bit/s (code 0 … 4), factory default 9600
Address	1 … 250, factory default 1; broadcast (address 0) is not supported. The address must not conflict with other devices on the bus.
Polling interval	more than 100 ms; wait 100 ms after reading one sensor before reading the next

8.2 Frame format

Start	Address	Function code	Data	CRC	End
≥ 3.5 characters idle	8 bit	8 bit	n × 8 bit	16 bit	≥ 3.5 characters idle

- Message frames are separated by idle intervals of at least 3.5 character times.
- The whole frame must be sent as a continuous character stream.
- The idle interval between two characters must not exceed 1.5 character times.

8.3 Registers

Address (dec/hex)	Modbus register	Content	Data type, unit
0 / 0	40001	flow value	16-bit unsigned; L/min (example 180 = 18.0 L/min)
1 / 1	40002	temperature sign	16-bit unsigned; 0 = positive, 1 = negative
2 / 2	40003	temperature value	16-bit unsigned; °C, one decimal place
3 / 3	40004	pressure value	16-bit unsigned; bar, two decimal places
4 / 4	40005	cumulative flow, high 16 bits	16-bit unsigned; registers 4 and 5 together form a 32-bit unsigned value in L
5 / 5	40006	cumulative flow, low 16 bits	16-bit unsigned; writing to address 5 changes the cumulative flow (0 … 65535)

Decimal, hexadecimal and Modbus register numbering are different notations of the same parameter; depending on the master software, one or the other is used.

8.4 Function codes and examples

03H - read

Send (hex): **01 03 00 00 00 06 C5 C8** - sensor address 01, read, start register 0000, read 0006 registers, CRC low, CRC high.

Response (hex): **01 03 0C 00 B4 00 01 00 92 01 F4 00 00 02 3B 9E 6C** - 12 data bytes:

Data	Decimal	Meaning
00 B4	180	flow 18.0 L/min
00 01	1	temperature negative
00 92	146	temperature 14.6 → –14.6 °C
01 F4	500	pressure 5.00 bar
00 00	0	cumulative flow, high 16 bits
02 3B	571	cumulative flow, low 16 bits → 571 L

06H - write

Send (hex): **01 06 00 05 00 00 99 CB** - write the value 0 to register 05 of sensor 01 (resets the cumulative flow). The sensor answers with the same frame.

8.5 Commissioning with a Modbus master program

- Set the slave ID to 1, function 03 (read), address 0 and quantity 6.
- Connect via the serial port: 9600 bit/s, 8 data bits, no parity, 1 stop bit, RTU mode, delay 100 ms.
- The current values are read: e.g. address 0 = 180 (18.0 L/min), address 1 = 1 (temperature negative), address 2 = 146 (–14.6 °C), address 3 = 500 (5.00 bar), address 4 = 0, address 5 = 7949 (cumulative flow 7949 L).
- To reset the cumulative flow, write the value 0 to address 5.

9 Maintenance, cleaning and removal

9.1 Maintenance and cleaning

Sensors (switches) do not require maintenance.

Warning Periodically check whether the switch is working properly. If the switch does not work properly, stop the operation immediately.

Caution Unsuitable cleaning agents may damage the switch.

The following cleaning agents can be used to clean polycarbonate: mild soap or detergent, isopropyl alcohol. Rinse with water immediately after cleaning. Do not leave cleaning agent on the surface of the product. Do not clean the product in high heat or in direct sunlight.

The following cleaning agents are known to affect the integrity of polycarbonate components and must not be used:

- ZEP Fast 505, Pinesol, Formula 409
- halogenated solvents (benzene, gasoline, acetone or carbon tetrachloride)
- strong alkalis
- methyl ethyl ketone
- abrasive substances

9.2 Removal

Danger Remove the switch only when it is depressurised and de-energised (electrical, hydraulic/pneumatic). Disconnecting the switch from pressure and power supply must be performed by trained or instructed personnel in accordance with the state of the art.

Warning The surface of the housing may become very hot at high operating temperatures.