# UNIVERSAL PRESSURE TRANSMITTER



- 0 … 50 MBAR TO 0 … 1000 BAR
- GAUGE · ABSOLUTE · COMPOUND
- 4 … 20 MA · 0 … 10 V · 1 … 5 V
- ACCURACY 0.2 % OR 0.5 %
- STAINLESS STEEL 316 · IP67 · M12

IP67 · Stainless Steel · M12 · 4…20 mA 0…10 V

## VERSIONS

| Feature | Versions |
|---|---|
| Gauge pressure | 0 … 50 / 100 / 350 / 600 mbar · 0 … 1 / 2 / 6 / 10 / 25 / 60 / 100 / 160 / 250 / 400 / 600 / 1000 bar |
| Absolute pressure | 0 … 50 / 100 / 350 / 600 mbar · 0 … 1 / 2 / 6 / 10 / 25 bar |
| Compound and vacuum | –10 … 10 · –50 … 50 · –100 … 100 · –100 … 0 · –100 … 500 · –100 … 900 kPa |
| Accuracy class | 0.2 % · 0.5 % |
| Process connection | G1/4 male with ED seal · NPT1/4 male · NPT1/2 male |
| Output | 4 … 20 mA (two-wire) · 1 … 5 V, 0 … 10 V, 1 … 10 V (three-wire) |
| Electrical connection | M12 × 1 connector, 4-pin · direct cable outlet, length to order |

office@octogon.org | +43 676 3628453
octogon GmbH | Roseggerstrasse 16 8700 Leoben | Austria



V00x | 11/2026 | © octogon GmbH

# OVERVIEW

## Compact stainless steel pressure transmitter with current or voltage output – for gauge, absolute and compound pressure from 0 ... 50 mbar to 0 ... 1000 bar.

A diffused silicon sensor measures the pressure; it withstands overload, is stable and resistant to interference and delivers precise, repeatable readings. The electronics output the signal as 4 ... 20 mA in two-wire mode or as a voltage in three-wire mode. The stainless steel 316 housing is protected to IP67; connection is via an M12 × 1 connector or a direct cable outlet. Typical uses are process and environmental control, hydraulic and pneumatic equipment, servo valves and drives, the chemical industry and medical instruments.

| 0 ... 1000 bar | 0.2 % | < 10 ms | IP67 |
|---|---|---|---|
| largest range | accuracy class | response time | protection class |

### MEASUREMENT

- gauge, absolute and compound pressure
- 0 ... 50 mbar to 0 ... 1000 bar
- accuracy 0.2 % or 0.5 %
- overload 150 % F.S.

### OUTPUT AND CONNECTION

- 4 ... 20 mA, two-wire
- 1 ... 5 V / 0 ... 10 V / 1 ... 10 V, three-wire
- supply 12 ... 30 V DC
- M12 × 1 connector or cable

# TECHNICAL DATA

## MEASUREMENT AND PRECISION

| | |
|---|---|
| Measuring principle | diffused silicon sensor |
| Overload range | 150 % F.S. |
| Accuracy class | 0.2 % · 0.5 % |
| Linearity | ± 0.2 % |
| Repeatability | ≤ ± 0.1 % F.S. |
| Temperature effect | < ± 0.02 % F.S. / K |
| Response time | < 10 ms (10 … 90 % F.S.) |

## TEMPERATURES

| | |
|---|---|
| Medium temperature | –25 … +80 °C |
| Ambient temperature | –30 … +85 °C |
| Storage temperature | –30 … +100 °C |

## MECHANICAL PROPERTIES

| | |
|---|---|
| Housing | stainless steel 316, Ø 23.6 mm |
| Process connection | G1/4 male (ED seal), NPT1/4 male, NPT1/2 male |
| Width across flats | 24 mm |
| Protection class | IP67 |
| Electrical connection | M12 × 1 connector, 4-pin, or cable (length to order) |

## ELECTRICAL PROPERTIES

| | |
|---|---|
| Supply voltage | 12 … 30 V DC |
| Current consumption | < 30 mA |
| Protection | overload, reverse polarity |

## OUTPUTS

| | |
|---|---|
| Current output | 4 … 20 mA, two-wire |
| Voltage output | 1 … 5 V / 0 … 10 V / 1 … 10 V, three-wire |
| Load 4 … 20 mA | ≤ (UB – 10 V) / 0.02 A (UB = supply voltage) |
| Load 0 … 10 V | ≥ 10 kΩ |
| Load 1 … 5 V | ≥ 5 kΩ |

## PIN ASSIGNMENT M12 × 1 CONNECTOR

| Pin · wire | 4 … 20 mA (two-wire) | 0 … 10 V / 1 … 5 V (three-wire) |
|---|---|---|
| 1 · BN brown | supply + (L+) | supply + (L+) |
| 2 · WH white | signal, to L– via load | – |
| 3 · BU blue | – | supply – (L–) |
| 4 · BK black | – | signal, to L– via load |

# DIMENSIONS (mm)

M12 × 1 connector: left G thread with ED seal, centre and right taper thread (NPT)

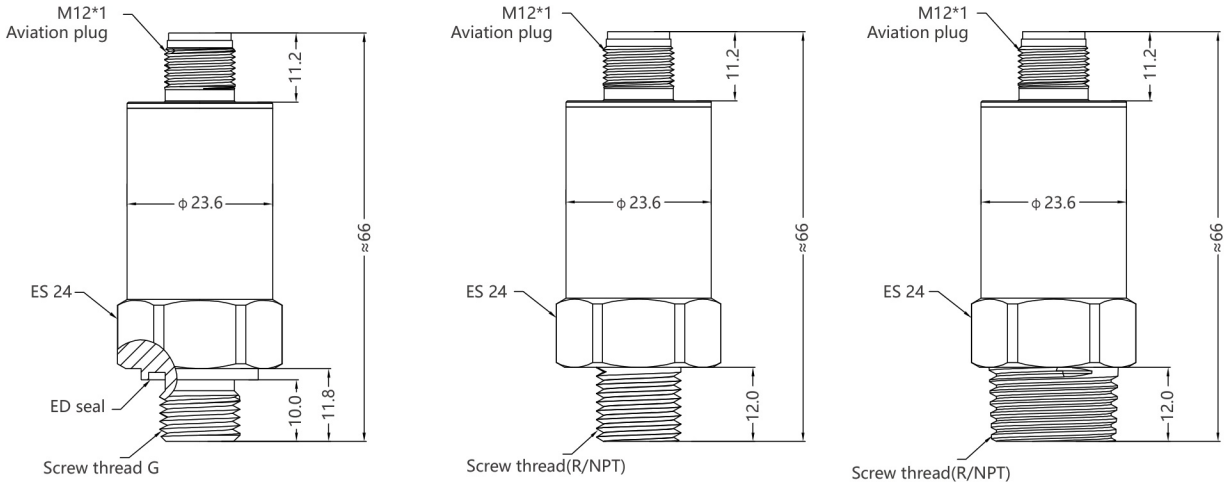


Cable outlet (length to order): process connections as above

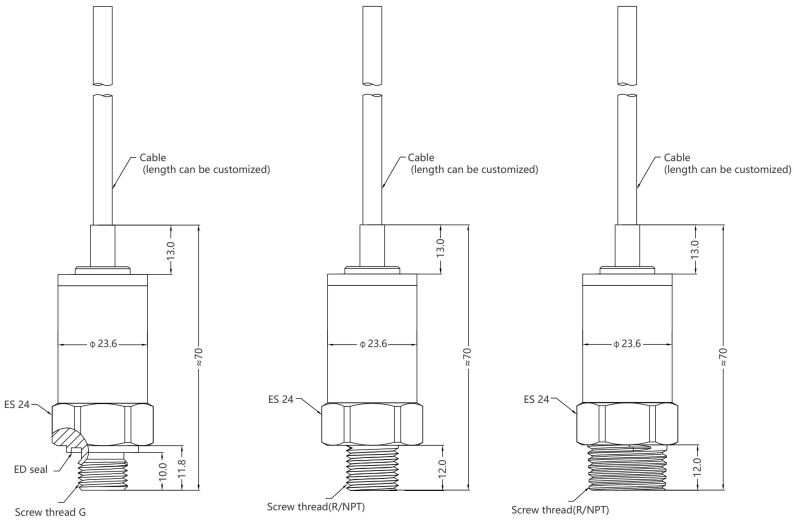


| | Thread length | ED seal |
|---|---|---|
| G1/4 male | 10.0 | yes |
| NPT1/4 · NPT1/2 male | 12.0 | no |

*Dimensions in mm. Overall length ≈ 66 (connector) or ≈ 70 (cable). ES = width across flats.*

# COMPLIANCE AND CERTIFICATION

| | |
|---|---|
| Protection Rating | IP67 |