OCTOGON

# MANUAL

# LWLE

## PRICE COMPUTING SCALE WITH PRINTER

Installation and user manual



| Document | Version | Date | Applies to |
|---|---|---|---|
| Installation and user manual | V00x | 11/2026 | LWLE |

This manual describes the LWLE price computing scale with built-in thermal printer: safety, installation, battery, keys and displays, zero-setting and tare, selling with up to three users, purchases and warehouse, item memory (PLU), printouts, settings menu and error messages.

# Contents

**1 About this manual** ... 2
1.1 Symbols ... 3
**2 Safety, warranty and disposal** ... 3
2.1 Safety notes ... 3
2.2 Warranty ... 3
2.3 Guidelines for proper disposal ... 3
**3 Product description** ... 4
3.1 Design and scope of delivery ... 4
3.2 Functions ... 4
3.3 Versions ... 4
3.4 Options on request ... 4
**4 Technical specifications** ... 5
**5 Dimensions** ... 6
**6 Installation and setting up** ... 6
6.1 Positioning ... 6
6.2 Starting up and powering off ... 6
**7 Battery use and recharging** ... 6
**8 Keys, displays and symbols** ... 7
8.1 Keypad ... 7
8.2 Display panel ... 8
8.3 Symbol functions ... 8
**9 Zero-setting and taring** ... 8
9.1 Setting the scale to zero (semi-automatic) ... 8
9.2 Automatic zero-setting upon start-up ... 8
9.3 Taring the scale (semi-automatic subtractive tare) ... 8
9.4 Preset tare via the keypad ... 9
**10 Selling operation** ... 9
10.1 Manual price setup ... 9
10.2 Three users, PLU price recall, totalizing ... 9
10.3 Recalling and printing amounts and total, change due ... 9
10.4 Displaying and deleting totalized weighings ... 9
10.5 General notes on totalization and printing ... 10
10.6 Immediate deletion of one totalized weighing ... 10
10.7 Product selling by items ... 10
**11 Goods purchases – warehouse management** ... 10
11.1 Enabling the stock mode ... 10
11.2 Purchase weighing and warehouse loading ... 10
11.3 Purchase receipt and change due ... 10
11.4 Immediate deletion of one purchase weighing ... 11
**12 PLU archives, inventories and printouts** ... 11
12.1 Setting up PLUs ... 11
12.2 Manual warehouse inventory loading ... 11
12.3 PLU display ... 11
12.4 Printing of sales archives ... 11
12.5 Printing of purchase archives ... 12
12.6 Warehouse inventory and under-stock printouts ... 12
12.7 Display backlight function ... 12
**13 Settings menu** ... 13
**14 Error messages** ... 14
**15 Directives and standards** ... 14

# 1 About this manual

The LWLE is a price computing scale for retail sale with a built-in thermal printer for non-fiscal receipts. Up to three users work simultaneously; item memory (PLU), purchases, warehouse stocks and archives are managed in the scale. It works on its internal rechargeable battery or connected to the supplied battery charger.

## 1.1 Symbols

| Notice | Meaning |
|---|---|
| Caution | Risk of electric shock, or: this operation must be performed by skilled personnel. |
| Important | Pay particular attention to the following instructions. |
| Note | Further information. |

Display texts are shown in bold, for example **TOTAL**; keys in capital letters, for example TARE. "Keys 2/8" and "keys 4/6" are the numerical keys with the arrows ▲▼ and ◄► respectively.

# 2 Safety, warranty and disposal

## 2.1 Safety notes

– Place the scale in a dry place, away from sources of heat and from direct sunlight and sheltered from draughts and rain.
– Do not wash the scale by using pressurised jets of water and do not immerse it in water.
– Clean the main parts of the scale with a damp cloth. For separate cleaning of the weighing tray, remove the tray and clean it with appropriate stainless steel cleaning products.
– Avoid leaving objects on the weighing tray when the scale is not being used or when it is switched off.
– Place all materials on the weighing tray with due care: dynamic loads may damage the internal weight sensor.
– If **- - oL - -** is shown, immediately remove the load from the scale (chapter 14).

## 2.2 Warranty

The general terms and conditions contained in the sales documentation shall apply.

## 2.3 Guidelines for proper disposal

The crossed-out wheeled bin symbol on the product or packaging indicates that:

– This is electrical/electronic equipment and cannot be disposed of as municipal solid waste, but must be delivered to a recycling center.
– Improper use or disposal can pollute the environment or damage human health.
– Non-compliance with these guidelines will be penalized in accordance with the regulations in force in the country of destination.
– It is recommended to dispose of the packing and packaging as required by local regulations.

# 3 Product description

## 3.1 Design and scope of delivery

- Multirange scale (multi-interval), class III, max. 3000 verification divisions (OIML R76:2006).
- Stainless steel loading plate.
- Backlit LCD displays on both sides, per side 4 × 6-digit (15 mm) and 1 × 18-digit (10 mm), on a display column.
- Integrated thermal printer with real-time clock/calendar.
- Waterproof keyboard with 50 keys.
- Bubble level and adjustable feet.
- Internal battery 6 V, 10 Ah capacity, operating time 100 h; external battery charger 100 ... 240 VAC included.
- RS232 serial port.

## 3.2 Functions

- Simultaneous management of 3 operators.
- Simultaneous display of weight, unit price, amount, tare, date and time or customized message; amount per item and total amount.
- Price unit €/kg or €/100 g; preset tare; automatic cancellation of price and tare.
- Item memory: 100 items (PLU) with name, code, price unit, unit sales price, unit purchase price, preset tare, stock; 56 PLU directly retrievable via keyboard.
- Items selling by number of pieces; automatic change calculation.
- Stock: management of purchase prices and suppliers; automatic or manual loading of stocks.
- Printing: amount per item, total amount and change; sales and purchase archives, stocks, under-stock items.
- Non-fiscal receipt: customizable header, date, time, operator number, item name, net weight, unit price, amount per item, total amount, change and customized message.

## 3.3 Versions

Multirange scale: the smaller division applies in the first weighing range (symbol C1), the larger division in the second weighing range (symbol C2).

| Capacity (kg) | Weighing range 1 (C1) | Weighing range 2 (C2) | Net weight (kg) |
|---|---|---|---|
| 3 / 6 | 0 ... 3 kg, e = 1 g | 3 ... 6 kg, e = 2 g | 8.6 |
| 6 / 15 | 0 ... 6 kg, e = 2 g | 6 ... 15 kg, e = 5 g | 8.6 |
| 15 / 30 | 0 ... 15 kg, e = 5 g | 15 ... 30 kg, e = 10 g | 8.6 |

## 3.4 Options on request

| Option | Description |
|---|---|
| Stainless steel deep tray | Stainless steel deep tray; dimensions 240 × 340 × 40 mm |
| Rechargeable battery | Rechargeable battery 6 V, 10 Ah capacity |
| Thermal paper roll | Thermal paper roll for weight/price/amount scales |
| Adhesive paper roll | Adhesive thermal paper roll |

# 4 Technical specifications

| Item | Value |
|---|---|
| Capacity (multirange) | 3/6 · 6/15 · 15/30 kg |
| Operation mode | multi-interval |
| Accuracy class | III |
| Max. verification divisions | 3000 (class III) |
| Linearity | < 0.01 % full scale |
| Display resolution | 3000 |
| Unit of measure | kg |
| Loading plate | Stainless steel |
| Display | backlit LCD on both sides, 4 × 6-digit (15 mm) and 1 × 18-digit (10 mm) |
| Printer | integrated thermal printer with real-time clock/calendar |
| Keyboard | 50 keys, waterproof |
| Levelling | Bubble level and adjustable feet |
| Net weight | 8.6 kg |
| Serial port | RS232 |
| Baud rate | 600, 1200, 2400, 4800, 9600 bit/s |
| Power supply | 100 … 240 VAC |
| Internal battery | 6 V, 10 Ah capacity |
| Operating time | 100 h |
| Battery charger | external, 100 … 240 VAC, included |
| Power-off | automatic |
| Humidity | < 85 %, condensate free |
| Storage temperature | –10 … +50 °C |
| Working temperature | –10 … +40 °C |
| Calibration | Calibration report on request |
| Compliance | CE, UKCA; OIML R76:2006, class III, 3000 divisions; conformity assessment (initial verification) on request |

# 5 Dimensions

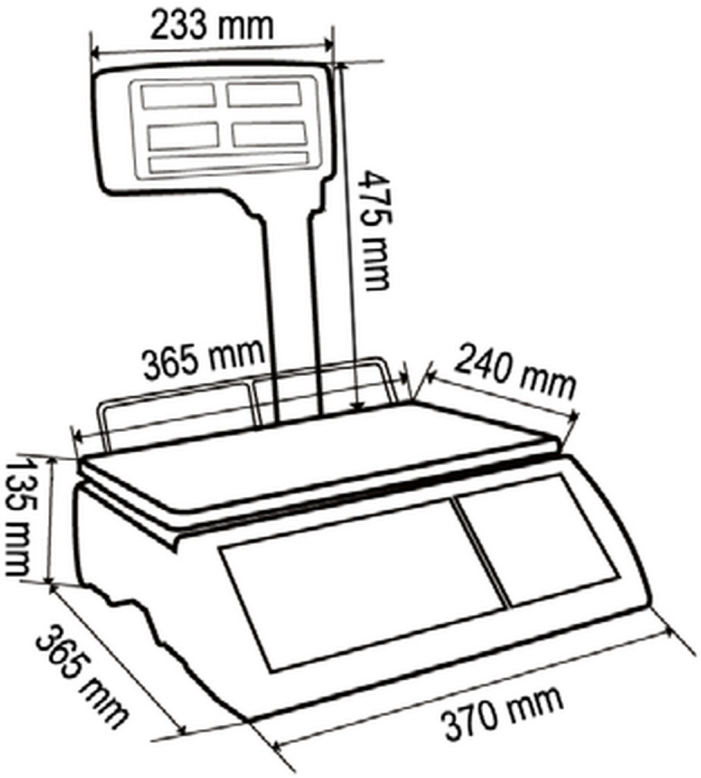


Scale with display column (dimensions in mm).

# 6 Installation and setting up

## 6.1 Positioning

– Stability: place the scale on a highly stable and flat surface. Adjust the feet so that all 4 of them are resting on the surface on which the scale is placed. To test the stability, place a load corresponding to the maximum capacity on the scale tray and check the scale stability under these conditions.

– Levelling: for correct operation the scale must be levelled correctly. Adjust the 4 feet until the level bubble on the left of the keypad is in the middle of the black circle.

## 6.2 Starting up and powering off

**Important** Before the first power-on, leave the scale on charge for at least 18 hours by using the supplied battery charger.

The scale comes with an external battery charger power supply and can be used with the external power supply permanently connected or disconnected.

– To switch the scale on, press and hold the POWER on/off button under the scale in its 'on' position for at least 2 seconds.

– To switch the scale off, press and hold the POWER on/off button under the scale in the 'off' position for at least 2 seconds.

# 7 Battery use and recharging

– The operating time with the internal rechargeable battery depends on the printer's use frequency (technical data: chapter 4).

– When the scale is used without the battery charger and the battery is nearly out of charge, the BATT. symbol lights up: recharge the battery as soon as possible. From this moment, the scale has an operating time of about 10 hours.

– When the external power supply is plugged into the scale during recharging, the colour of the Recharge LED indicates the battery charge level.

| Recharge LED | Meaning |
|---|---|
| red | The battery is almost completely flat |
| yellow or orange | The battery is recharging and only partially charged |
| green | The battery is fully charged, recharging completed |

# 8 Keys, displays and symbols

## 8.1 Keypad

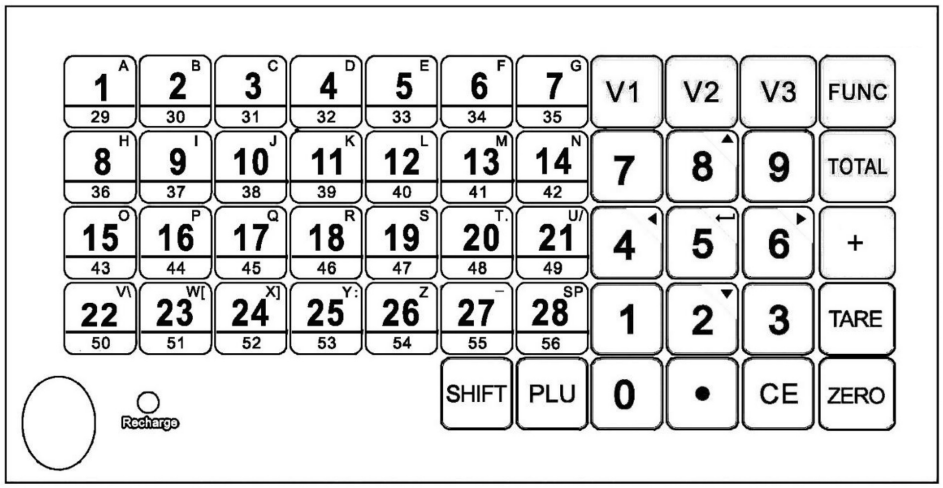


Keypad on the operator's side.

| Key | Function |
|---|---|
| 0 ... 9 | Entering a preset tare weight, setting a price or code and, in general, entering numerical values. Second function in the parameter setting menus: 2/8 scroll up (▲) and down (▼), 4/6 move left (◄) and right (►). |
| 1 ... 28, 29 ... 56 | Storing and directly recalling max. 56 product unit prices / tare weights / product descriptions |
| A ... Z | Entering product descriptions, your business name and address, etc. |
| . | Inserting 2 zero digits after each other while setting a unit price |
| PLU | Together with the keys 0 ... 99: storing and indirectly recalling max. 100 product unit prices / tare weights / product descriptions |
| TOTAL | Displaying the amounts totalized by each user (V1, V2, V3) |
| + (PRINT) | Printing the data displayed |
| FUNC | Accessing the scale configuration and setting functions; SAVE key in the parameter setting menus |
| TARE | Setting the tare weight value (net weight displayed with Net indicator on); ENTER key in the parameter setting menus |
| ZERO | Setting the scale to zero; ESC key in the parameter setting menus |
| SHIFT | Enabling the second key function: direct recall 1 ... 28 or 29 ... 56 |
| V1, V2, V3 | Selecting a user (1, 2 or 3) |
| CE | Deleting entered values such as unit prices, codes, etc. |

## 8.2 Display panel

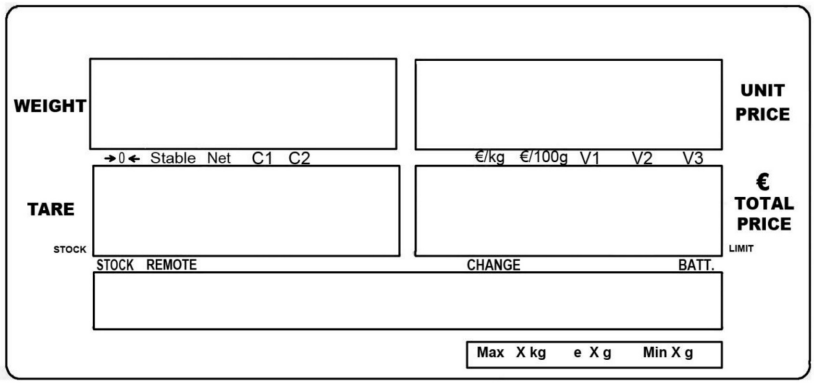


Display panel with the WEIGHT, UNIT PRICE, TARE and € TOTAL PRICE displays and the service display.

WEIGHT shows the weight, UNIT PRICE the unit price, TARE the tare weight and € TOTAL PRICE the amount. The 18-digit service display below shows messages, menu texts, date and time or a customized message.

## 8.3 Symbol functions

| Symbol | Meaning |
|---|---|
| €/100 g | Currently active price unit per hectogram |
| €/kg | Currently active price unit per kilogram |
| →0← | The display shows 0 and the deviation from 0 is ≤ ±0.25 divisions. |
| Stable | The displayed weight is stable. |
| Net | The displayed weight is a net weight (semi-automatic tare entered). |
| C1 | Operation within the first weighing range |
| C2 | Operation within the second weighing range |
| BATT. | Battery charge level is low |
| V1, V2, V3 | Currently active scale user |
| CHANGE | The change due display function is activated. |
| STOCK | The STOCK function (supplier purchase prices, warehouse loading) is activated. |

# 9 Zero-setting and taring

## 9.1 Setting the scale to zero (semi-automatic)

If there are no items on the weighing tray and the weight display indicates a value other than zero, press ZERO while the weight is being displayed to set the current weight to zero. If the current weight is ≥ ±2 % of the capacity (Max.), zero-setting is not allowed and the error message **Err4** is shown. When zero is displayed, the →0← symbol indicates that the deviation from 0 is ≤ ±0.25 divisions.

**Important** The zero-setting function does not alter the maximum capacity (Max.) of the instrument. A gross weight value ≤ ±2 % of the capacity (Max.) can be set to zero.

## 9.2 Automatic zero-setting upon start-up

Automatic zero-setting upon start-up is enabled only if the weight display indicates a value ≤ 10 % of the capacity (Max.). If **Err4** appears upon start-up, the scale is loaded with a weight exceeding 10 % of the capacity and automatic zero-setting is not allowed: remove the item from the scale, turn the scale off and then back on.

## 9.3 Taring the scale (semi-automatic subtractive tare)

Place the item to be tared on the scale and wait for the Stable symbol to appear. Press TARE: the display shows the net weight starting from 0 and the Net indicator confirms that a tare has been set. Several successive taring tasks can be performed. To return to gross weight display and delete the current tare, remove the item from the scale and press TARE once again.

**Important** The tare weight devices (semi-automatic tare, preset tare) modify the maximum capacity (Max.) of the instrument. Any weight value indicated as stable can be tared, provided that the condition T ≤ – Max. is true.

### 9.4 Preset tare via the keypad

Hold TARE pressed for 3 seconds. Enter the tare weight via the keypad, including any decimal points, and press TARE to confirm; it is deducted from the display value. To delete the stored tare weight, take the item off the scale and press TARE once again.

# 10 Selling operation

### 10.1 Manual price setup

Place the product on the weighing tray. Wait for the Stable indicator to light up and set the unit price in €/kg or €/100 g with the numerical keys 0 ... 9 and the . key if necessary (inserts 2 zero digits). WEIGHT shows the weight, UNIT PRICE the unit price and € TOTAL PRICE the amount payable. Press CE to delete the entered unit price and set a new price.

### 10.2 Three users, PLU price recall, totalizing

The scale manages the weighing tasks of up to 3 users and recalls stored product unit prices / tare weights / product descriptions (PLU) from memory.

- Place the product on the weighing tray; WEIGHT shows the weight of the product.
- Set the unit price manually or select the PLU number with the direct-recall keys 1 ... 28, with SHIFT and the direct-recall keys 29 ... 56, or press PLU and enter the number with the numerical keys 0 ... 9. UNIT PRICE shows the unit price.
- Press V1, V2 or V3 for a short time: an acoustic signal indicates that the weight has been stored and associated to the selected user; the symbol of the active user appears in UNIT PRICE. If warehouse stocks are enabled and loaded, the quantity weighed or sold is deducted.
- € TOTAL PRICE shows the amount. When the product is removed and the scale passes through zero (→0← symbol on), unit price, tare and amount are deleted automatically.
- Repeat for all items to be weighed, associating them to the different users (V1, V2, V3).

### 10.3 Recalling and printing amounts and total, change due

This procedure is used when one user sells individual items and issues a receipt for each item, or when up to 3 users work simultaneously and several products sold to one buyer are totalized. At the end, a (non-fiscal) receipt with the individual amounts and the total amount can be printed.

| Step | Action | Display |
|---|---|---|
| 1 | Store each weighing with V1, V2 or V3 (section 10.2). | – |
| 2 | When the user has finished weighing the customer's items: press TOTAL. | WEIGHT **TOTAL**, service display **SELECT V1/V2/V3** |
| 3 | Press V1, V2 or V3. | UNIT PRICE: amount; TARE **PAY**; service display **CHANGE** |
| 4 | Without change due: press TARE – the receipt is printed. With change due: enter the amount received with 0 ... 9, then press TARE. | next to **PAY** the amount received, **CHANGE** with the change |

The receipt contains the business name or logo, date and time, user number, weighing number (if several), product name (if present), net weight, unit price, unit amount, total amount, the change due if used and a final description. With TARE the weighings stored for the active user are then deleted; weighing can start again for a new buyer.

- Instead of TARE: + (PRINT) prints the receipt without deleting the stored weighings – weighing can continue.
- Instead of TARE: CE deletes the weighings stored for the active user without printing a receipt.

### 10.4 Displaying and deleting totalized weighings

Instead of TARE, press FUNC: WEIGHT shows the weight of the first item stored, UNIT PRICE the unit price, TARE **ACC1** (first totalized weighing) and € TOTAL PRICE the amount. Use the keys 2/8 to scroll through the stored weighings (**ACC1**, **ACC2**,

**ACC3** ...). To delete a weighing, select it and keep CE pressed until **ACC** starts blinking. Press ZERO to go back to the total display.

### 10.5 General notes on totalization and printing

- only for stable weights (Stable indicator on),
- only for weights ≥ 20 divisions (minimum weight),
- a subsequent weighing only after the weight has passed through the zero position.

### 10.6 Immediate deletion of one totalized weighing

Remove the product from the scale, reset the price entered incorrectly or select the PLU recalled incorrectly, place the product on the scale again and keep the key of the associated user (V1, V2 or V3) pressed for about 4 seconds. An acoustic signal sounds and **RETURN** is displayed for a short time. When warehouse stocks are enabled, the deleted quantity is added back.

### 10.7 Product selling by items

Remove all items from the scale, type the individual product price and press + (PRINT). The item number symbol appears in the WEIGHT field. Set the number of items with the numerical keys, then press V1, V2 or V3 to associate the sale to the user.

## 11 Goods purchases – warehouse management

In **STOCK MODE** the scale loads warehouse inventories and adds the quantity weighed/purchased. Purchase unit prices (PLU) can be stored and recalled to manage goods purchases.

### 11.1 Enabling the stock mode

Press FUNC for a short time. Use the keys 2/8 to select the **SALES MODE** field and the keys 4/6 to select the **STOCK MODE** function. Press TARE to confirm, then ZERO to exit the setting menu.

### 11.2 Purchase weighing and warehouse loading

- Place the purchased product on the weighing tray; WEIGHT shows the weight of the product.
- Set the purchase unit price manually or select the PLU number with the direct-recall keys 1 ... 28, with SHIFT and the direct-recall keys 29 ... 56, or press PLU and enter the number with the numerical keys 0 ... 9. UNIT PRICE shows the purchase unit price.
- Press V1, V2 or V3 for a short time: an acoustic signal indicates that the weight has been stored and the V1, V2, V3 symbols light up in UNIT PRICE. The warehouse inventory is loaded with the quantity weighed/purchased.
- € TOTAL PRICE shows the amount to be paid to the supplier. When the scale passes through zero after the product has been removed (→0← symbol on), price, tare and amount are deleted automatically.
- Repeat for all items to be weighed and purchased.

### 11.3 Purchase receipt and change due

The weighings of one supplier are totalized; at the end a (non-fiscal) receipt with the individual amounts and the total amount to be paid to the supplier is printed. Press TOTAL: WEIGHT shows **TOTAL**, UNIT PRICE the amount to be paid, TARE **PAY** and the service display **CHANGE**.

- Without change due: press TARE – the receipt is printed (business name or logo, date and time, weighing number, product name, net weight, unit price, unit amount, total amount, final description).
- With change due: enter the amount paid to the supplier with 0 ... 9; **CHANGE** shows the change to be received from the supplier. TARE prints the receipt including the change.
- TARE then deletes the stored weighings; + (PRINT) prints without deleting; CE deletes without printing.
- Displaying and deleting single weighings: press FUNC instead of TARE (as in section 10.4).

## 11.4 Immediate deletion of one purchase weighing

As in section 10.6: remove the product, correct the price or PLU, place the product again and keep V1, V2 or V3 pressed for about 4 seconds; **RETURN** is displayed for a short time. The warehouse inventory is updated by deducting the deleted quantity.

General notes on totalization and printing: as in section 10.5.

# 12 PLU archives, inventories and printouts

## 12.1 Setting up PLUs

Each PLU contains: product name and code, price unit (€/kg, €/100 g, number of items), sale unit price, purchase unit price, preset tare and minimum warehouse stock.

Press FUNC for a short time. Use the keys 2/8 to select the **F1 SET MODE** field and the keys 4/6 to select the **F3 PLU** function. Press TARE twice (**SET PLU CONTENT**): WEIGHT shows **PLU 00** and the service display **SELECT PLU NUMBER**. Then select the PLU number with the direct-recall keys 1 ... 28, with SHIFT and the direct-recall keys 29 ... 56, or press PLU and enter the number with the numerical keys 0 ... 9.

| Display | Entry |
|---|---|
| **SET nAMe** | Product name with A ... Z and 0 ... 9 |
| **SET PRODUCT NUMBER** | Product code with 0 ... 9 |
| **SET WEIGHT MODE** | Price unit with 4/6: **-kG** euros per kg, **-100G** euros per 100 g, **QUANTITY** price by item |
| **SET UNIT PRICE** | Sale unit price with 0 ... 9 |
| **SET STOCK PRICE** | Purchase unit price with 0 ... 9 |
| **SET PRE-TARE** | Preset tare with 0 ... 9 |
| **SET LOW LIMIT** | Safety (minimum) stock level with 0 ... 9 |

If necessary, delete each value with CE and confirm the new value with TARE. Afterwards WEIGHT shows **PLU 00** again and the service display **SELECT PLU NUMBER**: the next PLU can be programmed.

## 12.2 Manual warehouse inventory loading

Press FUNC for a short time. Use the keys 2/8 to select the **F1 SET MODE** field and the keys 4/6 to select the **F3 PLU** function. Press TARE (**SET PLU CONTENT**), select **SET INVENTORY** with 4/6 and confirm with TARE. At **SELECT PLU NUMBER**, select the PLU number with the direct-recall keys 1 ... 28, with SHIFT and the direct-recall keys 29 ... 56, or press PLU and enter the number with the numerical keys 0 ... 9. At **SET INVENTORY**, enter the inventory level with 0 ... 9 (delete with CE if necessary) and confirm with TARE.

Warehouse inventories are updated by the sale of a product (unloading), the purchase of a product (loading) and the manual deletion of totalized weighings (loading if sale, unloading if purchase).

## 12.3 PLU display

- All PLUs: Press FUNC for a short time. Use the keys 2/8 to select the **F1 SET MODE** field and the keys 4/6 to select the **F3 PLU** function. Press TARE (**SET PLU CONTENT**), select **SCAN PLU** with 4/6 and confirm with TARE – or simply hold PLU pressed for a few seconds. Scroll through the PLUs with 2/8, the direct-recall keys 1 ... 28 or SHIFT and 29 ... 56.
- Single PLU: hold one of the direct-recall keys 1 ... 28 (or SHIFT and 29 ... 56) pressed for a few seconds.
- Displayed: WEIGHT PLU number, UNIT PRICE sale unit price, TARE stock value, TOTAL PRICE minimum stock level, service display product name.

## 12.4 Printing of sales archives

Press FUNC for a short time. Use the keys 2/8 to select the **F1 SET MODE** field and the keys 4/6 to select the **F4 SALES RPT** function. Press TARE, select the type with 4/6 and confirm with TARE:

| Selection | Effect |
|---|---|
| **TODAY REPORT** | Daily sales report: date and time, name, weight and amount of the products sold, total amount of goods sold |
| **CLEAR ALL SALES** | Erase the sales archives with all stored weighings relating to selling |
| **STORED SALES** | Display the memory space taken up by the sales archives |

At the end of every day (at 23.59:59) the sales archives are erased automatically; if the scale is switched on, **CLEAR ALL SALES** is displayed for a few seconds. If the scale is switched off, the erasure is performed and **CLEAR ALL SALES** is displayed for a few seconds upon start-up.

## 12.5 Printing of purchase archives

Press FUNC for a short time. Use the keys 2/8 to select the **F1 SET MODE** field and the keys 4/6 to select the **F5 PURCHASE REPORT** function. Press TARE, select the type with 4/6 and confirm with TARE:

| Selection | Effect |
|---|---|
| **TODAY REPORT** | Daily purchase report: date and time, name, weight and amount of the products purchased, total amount of goods purchased |
| **DAILY REPORT** | Purchase report for a period: enter the start date (**INPUT START DATE**) and end date (**INPUT END DATE**) with 0 ... 9, for example 01-01-15 and 07-02-15; printed per day with product name, weight, amount and total amount |
| **PRODUCT REPORT** | Purchase report for one product and period: enter **INPUT START DATE**, **INPUT END DATE** and the product code (**INPUT PRODUCT NUMBER**), for example 01-03-16, 08-11-16 and 0001; printed are name, weighing number, date and time, weight, unit price, amount and total amount |
| **CLEAR ALL PURCHASE** | Erase the purchase archives with all stored weighings relating to purchasing |
| **STORED PURCHASE** | Display the memory space taken up by the purchase archives |

**Important** Delete the purchase archives regularly. From 340 records (**STORED PURCHASE**) **LOW MEMORY** appears on the display; at 350 records, delete the records immediately.

## 12.6 Warehouse inventory and under-stock printouts

– Warehouse inventory with value: Press FUNC for a short time. Use the keys 2/8 to select the **F1 SET MODE** field and the keys 4/6 to select the **F6 INV RPT** function. TARE prints: print date, product name, in-stock quantity, purchase unit price, total item value, total in-stock goods value.

– Under-stock items: Press FUNC for a short time. Use the keys 2/8 to select the **F1 SET MODE** field and the keys 4/6 to select the **F7 LACK REPORT** function. TARE prints: print date, product name, product code, in-stock quantity, safety minimum stock level.

## 12.7 Display backlight function

Three modes: always on (**BACK LIGHT ON**), always off (**BACK LIGHT OFF**) and automatic (**BACK LIGHT AUTO**, enabled only while weighing). Hold FUNC pressed for a few seconds, select the **F1-1 BACKLIT** field with 2/8 and set the mode with 4/6 (also in the settings menu, chapter 13).

# 13 Settings menu

**Caution** Only installers are allowed to access these functions.

Hold FUNC pressed for a few seconds. Select the menu or parameter with 2/8, select the submenu and change the setting with 4/6, confirm with TARE, exit with ZERO.

| Menu | Function | Settings |
|---|---|---|
| **F1 SET BASIC** | Basic settings | |
| **F1-1 BACKLIT** | Display backlight | **BACK LIGHT AUTO** (standard), **BACK LIGHT OFF**, **BACK LIGHT ON** |
| **F1-2 SCALE ID** | Scale address | **SCALE ID: 00**: address 0 ... 99 with 0 ... 9 |
| **F1-3 PLUCLR** | Deletion of the entered PLU (sale unit price) | **CLEAR PLU UNLOAD**: every time the product is removed (standard); **CLEAR PLU STANDBY**: when the scale enters standby; **DO NOT CLEAR**: remains active until a new PLU is entered or the current one is edited |
| **F1-4 STANDBY** | Service display in standby (no weighing or selling) | **DISP TIME**: date and time (standard); **DISP BANNER**: flowing text from **F1-5 BANNER** |
| **F1-5 BANNER** | Flowing text of the service display | max. 25 characters with A ... Z and 0 ... 9 (for example the shop's name); active with **DISP BANNER** |
| **F2 SET PRICE** | Price settings (PLU) | |
| **F2-1 SET DEC** | Decimals for price and amount | **DECI** 0.00 – 0.000 – 0 – 0.0; for euro **DECI 0.00** (standard) |
| **F2-2 PRCMODE** | Decimal point | **DESC MODE FIX** fixed, **DESC MODE FLT** floating; for euro **DESC MODE FIX** (standard) |
| **F2-3 COIN** | Currency name | with A ... Z and 0 ... 9; for euro **EURO** (standard) |
| **F2-4 MIN COIN** | Currency minimum unit | **MIN COIN 1**, **MIN COIN 2**, **MIN COIN 5**, **MIN COIN 10**; for euro **MIN COIN 1** (standard) |
| **F3 SET CLOCK** | Date and time | |
| **F3-1 SET DATE** | Date | day – month – year with 0 ... 9 |
| **F3-2 SET TIME** | Time | hours : minutes : seconds with 0 ... 9 |
| **F3-3 D-TYPE** | Date format | **DATE DD-MM-YY**, **DATE YY-MM-DD**, **DATE MM-DD-YY** |
| **F4 SET PRINT** | Printout settings | |
| **F4-1 P FORMAT** | Printout type | **RECEIPT 1** receipt (standard); **LABEL 1** label |
| **F4-2 P COPY** | Number of printouts | **COPY 1** (standard) ... **COPY 5** |
| **F4-3 HEADER 1** | Header, first line | max. 32 characters, for example shop name |
| **F4-4 HEADER 2** | Header, second line | max. 32 characters, for example postal or e-mail address |
| **F4-5 FOOTER 1** | Footer, first line | max. 32 characters, for example website address |
| **F4-6 FOOTER 2** | Footer, second line | max. 32 characters, for example a message to your customers |
| **F5 SET SERIES** | Serial port | |
| **F5-1 S MODE** | Enabling RS232 | **NONE** disabled (standard); **CONTINUE SEND** enabled, continuous sending |
| **F5-2 S BAUD** | Communication speed | 9600, 600, 1200, 2400, 4800 bps |
| **F5-3 S VERIFY** | String type | **VERIFY MODE 8N1** (standard), **VERIFY MODE 7E1**, **VERIFY MODE 7O1** |
| **F6 TECH** | not used | – |
| **F7 LANGUAGE** | Language | ITALIAN, ENGLISH, GERMAN, FRENCH |

# 14 Error messages

| Display | Meaning |
|---|---|
| **- - oL - -** | With an acoustic signal: the capacity has been exceeded by 9 divisions. Immediately remove the load from the scale to avoid overloading the weight sensor. |
| **bAt-Lo** | Battery charge level low: connect the power supply cord to the wall socket. |
| **Err4** | Zero-setting attempted for a weight value exceeding 2 % of the capacity (Max.) – only a gross weight value ≤ ±2 % of the capacity can be set to zero. Upon start-up: the scale was loaded with a weight exceeding 10 % of the capacity, automatic zero-setting is not allowed (section 9.2). |
| **Err5** | Error in keypad connection |
| **Err6** | The load cell (internal weight sensor) is either damaged or disconnected. |
| **LOW MEMORY** | Purchase archives almost full – delete the records (section 12.5). |

# 15 Directives and standards

According to the declarations of conformity (EU and UKCA) for the scale:

| Mark applied | Legislation | Standards |
|---|---|---|
| CE | 2014/30/EU EMC Directive | EN 55032: 2015; EN 61000-3-2: 2014; EN 61000-3-3: 2013; EN 55024: 2010 + A1: 2015 |
| CE M (only if the "M" mark is applied) | 2014/31/EU NAWI Directive | EN 45501:2015; OIML R76-1:2006 |
| UKCA | Electromagnetic Compatibility Regulations 2016 | BS EN 55032: 2015; BS EN 61000-3-2: 2014; BS EN 61000-3-3: 2013; BS EN 55024: 2010 + A1: 2015 |

The declarations of conformity are available from octogon on request.