TENSION AND COMPRESSION FORCE TRANSDUCER

TENSION & COMPRESSION



- CAPACITY 5 ... 100 KN
- ISO 376 · CLASS 00 ... 1
- STAINLESS STEEL · IP67
- FOR TESTING MACHINES

CE · RoHS COMPLIANT · IP67 · Stainless Steel · ISO 376 REFERENCE STANDARD · ASTM E74 FORCE CALIBRATION · Dynamic Measurement · mV/V

NOMINAL LOAD (FS)

Capacity	Thread
5 kN	M20 × 1.5
10 kN	M20 × 1.5
25 kN	M20 × 1.5
50 kN	M30 × 2
75 kN	M30 × 2
100 kN	M30 × 2

Accuracy classes to ISO 376. b', fc and u in % of reading, from 1/10 of the nominal load. Classification to ASTM E74 on request.

OVERVIEW

Tension and compression force transducer for testing machines from 5 to 100 kN, accuracy classes 00, 0.5 and 1 to ISO 376.

The stainless steel body is protected to IP67 and has a female thread M20 × 1.5 (5 ... 25 kN) or M30 × 2 (50 ... 100 kN) at both ends. With loading head and spherical loading head it measures compression, with knuckle joints tension; dynamic loads up to 50 % of the nominal load. Classification to ASTM E74 is available on request.

5 ... 100 kN	00 · 0.5 · 1	2 mV/V	IP67
capacities	classes ISO 376	nominal sensitivity	protection class

MEASUREMENT	DESIGN
tension and compression, also dynamic	stainless steel, IP67
class 00, 0.5 or 1 to ISO 376	female thread M20 × 1.5 or M30 × 2
linearity ± 0.03 % F.S.	5 m cable, MIL6M or M12 option
nominal sensitivity 2 mV/V	accessories for tension and compression

TECHNICAL DATA

PRECISION ISO 376 (CLASS 00 · 0.5 · 1)

Repeatability 0°/120°/240° (b′)	± 0.050 · 0.085 · 0.150 %
Interpolation (fc)	± 0.020 · 0.040 · 0.055 %
Reversibility (u)	± 0.070 · 0.135 · 0.250 %
Zero (f0), F.S.	± 0.010 · 0.020 · 0.020 %
Linearity	± 0.03 % F.S.
Hysteresis	± 0.03 % F.S.
Temperature effect on zero (10 °C)	± 0.030 % F.S.
Temperature effect on sensitivity (10 °C)	± 0.011 % F.S.

MECHANICAL PROPERTIES

Material	stainless steel
Displacement at nominal load	max. 0.3 mm
Weight	1.45 ... 4.45 kg
Protection class (EN 60529)	IP67

ELECTRICAL PROPERTIES

Nominal sensitivity	2 mV/V
Sensitivity tolerance	± 0.1 % F.S.
Input resistance	440 ± 20 Ω
Output resistance	352 ± 2 Ω
Insulation resistance	> 5 GΩ
Zero balance	± 1 % F.S.
Recommended supply voltage	10 V
Nominal supply voltage	1 ... 15 V
Maximum supply voltage	18 V
Cable	PVC 105 °C, shielded, Ø 5.2 mm, 4 × 0.35 mm², 5 m

TEMPERATURE

Reference temperature	+23 °C
Nominal temperature range	–10 ... +40 °C
Service temperature	–10 ... +70 °C
Storage temperature	–20 ... +80 °C

ELECTRICAL CONNECTION

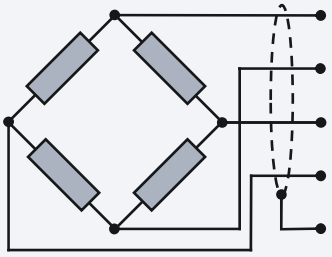

+ EXCITATION	RED
– EXCITATION	BLACK
+ SIGNAL	WHITE
– SIGNAL	YELLOW
SHIELD	

MECHANICAL LIMITS (REFERRED TO NOMINAL LOAD)

Service load	120 %FS	Load without any permanent deformation or change in calibration.
Max. permissible load	150 %FS	The highest static load that may be applied once or briefly without mechanical damage.
Breaking load	> 300 %FS	Load at which permanent deformation or mechanical failure (fracture) occurs.
Max. transverse load	50 %FS	Maximum lateral or shear load that can be applied (e.g. due to misalignment or friction).
Max. permissible dynamic load	50 %FS	For cyclic or oscillating loads, the amplitude should not exceed this load to prevent fatigue failure.

CONNECTORS (OPTION)

Assignment	M12, 5-pole	MIL6M
Excitation +	1	A
Excitation –	3	B
Output +	2	D
Output –	4	C
Shield	5	F

ACCESSORIES AND OPTIONS

Loading head	5 ... 25 kN and 50 ... 100 kN, each matching
Spherical loading head	M20 (5 ... 25 kN) · M30 (50 ... 100 kN)
Knuckle joints	M20 (5 ... 25 kN) · M30 (50 ... 100 kN)
Connector	MIL6M or M12, direct output instead of cable
Connection cable	female MIL6M, 6-pole, 5 m · female M12 × 1, 5-pole, 3 m; PVC, shielded
Calibration report	compression or tension

DIMENSIONS (mm)

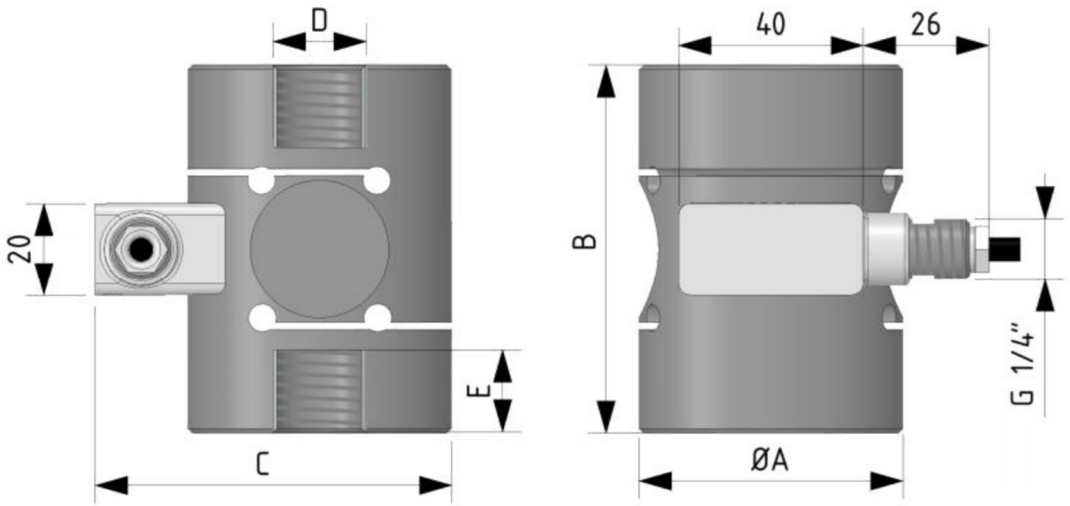

	5 · 10 · 25 kN	50 · 75 · 100 kN
Ø A	57	82
B	80	110
C	74.5	102
D	M20 × 1.5	M30 × 2
E	17	20

Dimensions in mm. Installed height with loading head and spherical loading head (compression) A = 117 mm (5 ... 25 kN) or 149 mm (50 ... 100 kN), with knuckle joints (tension) B ≈ 200 mm or ≈ 300 mm. Cable weight can influence measurement: place the cable on the fixed side, opposite to the load.

COMPLIANCE AND CERTIFICATION

Protection Rating	IP67	
Compliance	CE, RoHS	
Calibration	Calibration report on request (compression or tension)	
Certifications	ISO 376	Accuracy classes 00, 0.5 and 1 to ISO 376
Certifications (on request)	ASTM E74	Classification to ASTM E74