OCTOGON

MANUAL

LRBF

COMPACT RING LOAD CELL

Mounting and installation manual



Document	Version	Date	Applies to
Mounting and installation manual	V00x	11/2026	LRBF, all nominal loads

This English version is a translation of the German version (LRBF Manual V00x DE) by octogon. The German version is authoritative.

Contents

1 About this manual 2
2 Safety 2
3 Device 3
3.1 Characteristics for mounting and connection 3
3.2 Nominal loads 3
3.3 Mechanical limits 3
3.4 Dimensions (mm) 4
4 Mounting 4
5 Electrical connection 5
5.1 Wiring 5
5.2 Installation notes 5
6 Commissioning and testing 5
6.1 Commissioning 5
6.2 Check with a digital multimeter 5
7 Maintenance, cleaning and disposal 6

1 About this manual

This manual describes mounting, electrical connection, testing and maintenance of the LRBF load cell (compact ring load cell). Manufacturer type: FRF.

The device data in chapters 3 and 5.1 are taken from the LRBF datasheet (LRBF Datasheet V06 EN). Further characteristics, compliance, certifications and ordering options are given there. The other chapters contain general instructions for strain gauge load cells; they do not replace the design of the respective system.

Important Read this manual completely before mounting and commissioning and keep it for later reference.

2 Safety

– The load cell measures weight forces or forces in the intended load direction. It may only be operated within the limits given in the datasheet and in chapter 3.
– Mounting, connection and commissioning only by qualified personnel familiar with this manual.
– The load cell is not a safety component. If a fracture or failure could endanger persons or cause damage to property, the system must be additionally secured mechanically (e.g. catch device, overload stop).
– The safe overload must not be exceeded, not even briefly – also not during installation, when the system is transported or by shocks during loading.
– Do not carry or pull the load cell by its cable and do not modify it (e.g. drilling, grinding, opening the housing).

3 Device

3.1 Characteristics for mounting and connection

Characteristic	Value
Protection rating	IP66 (IEC 60529)
Rated Output (Cn)	1.0 mV/V±10 % at FS
Zero Balance	< ±0.05 %
Compensated temperature range	-10...+60 °C
Operating temperature range	-20...+80 °C
Reference Temperature	23 °C
Material	17-4PH STAINLESS STEEL | 1.4542
Deflection at FN	~ 0.6 mm
Bridge configuration	Full Wheatstone bridge, 4-wire
Input resistance	780 ± 20 Ω
Output resistance	700 ± 10 Ω
Insulation resistance	≥ 5,000 MΩ at 100 V
Recommended excitation voltage	5 - 15 V
Cable diameter	5 mm
Cable length	4 000 mm

3.2 Nominal loads

Nominal load (kN)	Nominal load (kg)	Weight (kg)	Rated output (mV/V)
5	500	0.3	1.0 ±10%
10	1 000	0.9	1.0 ±10%
20	2 000	0.9	1.0 ±10%
50	5 000	0.9	1.0 ±10%
100	10 000	0.9	1.0 ±10%

3.3 Mechanical limits

Limit	Value	Meaning
Service load	120 %FS	Load without any permanent deformation or change in calibration.
Safe overload	150 %FS	The highest static load that may be applied once or briefly without mechanical damage.
Breaking load	> 200 %FS	Load at which permanent deformation or mechanical failure (fracture) occurs.
Max. transverse load (side)	50 %FS	Maximum lateral or shear load that can be applied (e.g. due to misalignment or friction).
Max. permissible dynamic load	70 %FS	For cyclic or oscillating loads, the amplitude should not exceed this load to prevent fatigue failure.

3.4 Dimensions (mm)

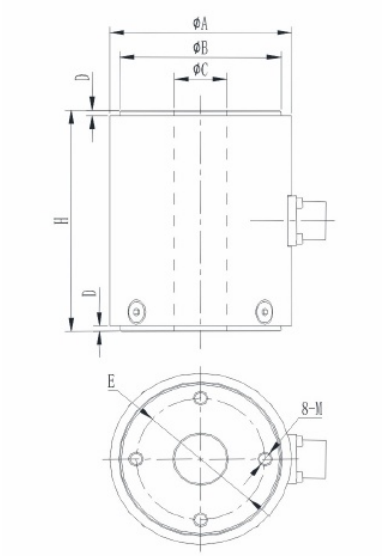

Cap (kN)	A	B	C	D	E	H	M
5	40	35	10H8	1	24	50	M4deep8
10, 20, 50,100	62	55	18H8	2	44	70	M5deep8

4 Mounting

Transport and storage

Transport and store the load cell in its original packaging, dry and protected against shocks. Do not drop it: even an impact without visible damage can overload the measuring element.

Sizing

Select the nominal load so that the dead weight of the system, the maximum live load and the expected shocks, vibrations and uneven load distribution together remain below the nominal load. The limits in chapter 3 (safe overload, transverse load, dynamic load) apply to the individual load cell.

Support surfaces and load application

Support and load surfaces must be flat, clean and sufficiently rigid so that they do not deflect under load. Apply the force centrally and in the intended load direction (observe the marking on the load cell, if present).

Transverse, bending and torsional forces as well as misalignment falsify the measurement and can overload the load cell. They are avoided with suitable mounting accessories (mounting kit, load button, rod end, self-aligning bearing); thermal expansion of the system must be able to compensate freely.

Fastening

Use only the intended mounting holes and threads. Tighten screws to the tightening torque given in the datasheet, otherwise to the usual value for the screw and property class. Do not transmit any force through the measuring element when tightening (hold against it).

Avoid force shunts

Pipes, cables, covers or deposits must not connect the weighed structure to its surroundings. Make connections to the weighed structure flexible.

Welding and earthing

If possible, do not weld on the system while the load cell is installed. If it is unavoidable: disconnect the load cell electrically from the electronics and attach the earth clamp of the welding machine close to the welding point so that no current flows through the load cell.

Bridge the load cell with a flexible copper strap (connect the load side to the support side) and earth the system so that welding, lightning and electrostatic currents do not flow through the load cell.

Important Overloaded load cells may measure incorrectly without visible damage. After an overload, carry out the check in chapter 6.

5 Electrical connection

5.1 Wiring

Bridge configuration: Full Wheatstone bridge, 4-wire.

Connection	Wire colour
+ EXCITATION	RED
– EXCITATION	BLACK
+ SIGNAL	GREEN
– SIGNAL	WHITE
SHIELD	–

Characteristic	Value
Recommended excitation voltage	5 - 15 V
Cable diameter	5 mm
Cable length	4 000 mm

5.2 Installation notes

– Connect only when de-energised. The excitation voltage of the electronics must not exceed the value given in the datasheet.

– Route the measuring cable separately from power and control cables (separate cable duct or conduit), do not kink it, fasten it with strain relief and protect it against mechanical damage.

– Connect the shield according to the specifications of the electronics.

– Protect open cable ends and junction boxes against moisture; the protection rating of the load cell does not apply to the open cable end.

– Several cells are connected in parallel via a junction box (summing box).

– Four-wire technology: the cable is part of the temperature compensation of the cell. Do not shorten the cable; an extension changes the output signal and must be taken into account during calibration.

6 Commissioning and testing

6.1 Commissioning

– Check mounting and connection according to chapters 4 and 5, then switch on the excitation voltage and let the system warm up for a few minutes.

– Adjust the zero point in the unloaded state and calibrate the system with known weights or forces.

6.2 Check with a digital multimeter

For troubleshooting or after an overload, disconnect the load cell from the electronics and measure the values between the wires:

– Input resistance between + excitation and – excitation.

– Output resistance between + signal and – signal.

– Insulation resistance between all wires (connected together) and the housing or shield – measure with no more than the test voltage given in the datasheet.

– Zero signal: with excitation and without load, measure the voltage between + signal and – signal and compare it with the zero balance according to the datasheet.

Reference values from the LRBF datasheet:

Characteristic	Value according to datasheet
Input resistance	780 ± 20 Ω
Output resistance	700 ± 10 Ω
Insulation resistance	≥ 5,000 MΩ at 100 V
Zero Balance	< ±0.05 %

Note If the measured values deviate significantly, do not continue to use the load cell and contact octogon technical customer service.

7 Maintenance, cleaning and disposal

– The load cell is maintenance-free. Check regularly: cable and cable outlet for damage, fastening, deposits and force shunts, zero point of the system.
– Clean with a damp cloth and a cleaning agent that does not attack the material according to the datasheet. Do not direct high-pressure or steam jets at the cable outlet and seals.
– Check the calibration of the system at intervals appropriate to the application and after every overload.
– Dispose of the load cell as electrical and metal scrap in accordance with the applicable local regulations.