OCTOGON

MANUAL

LPMB

WIRELESS LOAD SHACKLE

Installation and user manual



Document	Version	Date	Applies to
Installation and user manual	V00x	11/2026	LPMB, WLL 4750 kg

This manual describes the LPMB wireless load shackle: safe use in lifting operations, assembly and orientation, batteries, the radio system and its configuration with the T24 Toolkit, calibration settings, radio range, inspection, maintenance and recalibration.

octogon GmbH · Roseggerstrasse 16 · 8700 Leoben · Austria · office@octogon.org

Contents

1 About this manual ... 2
1.1 Product covered ... 3
1.2 Notation ... 3
2 Safety and conditions of use ... 3
2.1 Conditions of use for lifting ... 3
2.2 Handling the shackle ... 3
2.3 Warranty and disposal ... 3
3 Product description ... 4
3.1 Overview ... 4
3.2 Parts of the shackle ... 4
3.3 Technical data ... 4
3.4 Dimensions ... 5
4 Assembly and use ... 5
4.1 Pairs of pin and bow ... 5
4.2 Applying the load ... 5
5 Batteries ... 6
5.1 Inserting and replacing the batteries ... 6
5.2 Choosing batteries ... 6
5.3 Battery life ... 6
6 The T24 radio system ... 6
6.1 Transmitters and receivers ... 6
6.2 Radio channel and group key ... 7
6.3 ID and data tag ... 7
6.4 Operating modes and sleep delay ... 7
6.5 Pairing ... 7
6.6 Radio traffic, repeaters and logging ... 8
7 Configuration with the T24 Toolkit ... 8
7.1 What is needed ... 8
7.2 Connecting to the LPMB ... 8
7.3 Information page ... 8
7.4 Battery and radio levels ... 8
7.5 Radio settings ... 9
7.6 Save and restore ... 9
7.7 Spectrum analyser and channel monitor ... 9
8 Shackle settings and calibration ... 9
8.1 Data rates and quality ... 9
8.2 Calibration ... 10
8.3 Calibration by certificate ... 10
8.4 Advanced calibration ... 10
8.5 Advanced settings ... 10
9 Antenna and radio range ... 10
10 Inspection, maintenance and recalibration ... 11
10.1 Before and after every use ... 11
10.2 Checking zero and readings ... 11
10.3 Thorough examination and recalibration ... 11
10.4 Maintenance ... 11
11 Troubleshooting ... 11
12 Conformity ... 12

1 About this manual

The LPMB is a load shackle with wireless measurement: a bow shackle whose load pin measures the load. The radio transmitter and its two AA batteries sit in an enclosure on the pin. The readings are sent by 2.4 GHz radio to one or more receivers.

1.1 Product covered

Item	Value
Code	LPMB
Working load limit (WLL)	4750 kg
Manufacturer type	T24-S475
Other shackles of the series	LPMA (3250 kg) and LPMC (9000 kg), with manuals of their own

1.2 Notation

Items, buttons and pages of the configuration software are set in bold, for example **Pair** or **System Zero**. Instructions marked "Important" need particular attention.

2 Safety and conditions of use

Important Never use the LPMB above its working load limit (WLL) of 4750 kg. If the WLL has been exceeded, remove the shackle from use and contact octogon.

2.1 Conditions of use for lifting

– The working load limit (WLL) of the shackle assumes the absence of exceptionally hazardous conditions. These include offshore activities, lifting of persons and lifting of potentially dangerous loads such as molten metals.

– With every use the degree of hazard must be assessed by a competent person and the safe working load (SWL) reduced accordingly from the working load limit.

– No advice is given as to how the data from the shackle is used. All lifting operations are different and must be supervised by suitably qualified and experienced riggers. It is the user's responsibility to ensure conformity with local regulations and legislation.

– The integrator must fully assess the suitability of the product as part of any control system, and the product must be used within its published parameters at all times.

– Before being calibrated as a whole assembly, the bows are subjected to a 200 % proof load (static test coefficient of 2) and the pins to a 150 % proof load (static test coefficient of 1.5). However, the product must never be used above the WLL.

2.2 Handling the shackle

– Inspect the shackle before and after every use (chapter 10). Take damaged shackles or components out of service.

– Before every use check that all settings are as expected. The most safety-critical settings are the system zero and the units: if they have been changed unknowingly, the readings can be unexpected and misleading.

– Pin and bow are calibrated and load tested together: keep them as a pair and fit them only in the calibrated orientation, always with bobbin, nut and retaining clip (chapter 4).

– Do not replace or swap any load bearing parts yourself – the calibration of the unit becomes void.

– The shackle is a sensitive measuring device calibrated to ensure accuracy and reliability. Take care during use, transport and storage to avoid unnecessary mechanical damage.

2.3 Warranty and disposal

The general terms and conditions contained in the sales documentation shall apply.

The shackle contains electronics and batteries. Do not dispose of the shackle or used batteries with household waste; return them to a collection point for electrical equipment or batteries in accordance with local regulations.

3 Product description

3.1 Overview

A wireless load shackle for rigging points: 4750 kg working load limit (WLL), readings by 2.4 GHz radio up to 800 m, factory calibrated. Built to withstand challenging environments and weather conditions, it monitors and logs precise loads on any given rigging point: to safely distribute weight for indeterminate loads, roof structures and mother-grids, and to indicate alarms against rigging component overload. The surface treated bow follows BS EN 13889, the load pin is aerospace grade stainless steel; a load centralising bobbin is supplied as standard.

- Working load limit (WLL) 4750 kg, safety factor 5:1.
- Factory calibrated: pin and bow are calibrated together. Accuracy with the original bobbin typically ±1 % of load or ±25 kg, whichever is greater.
- Two AA batteries in the enclosure on the pin; the antenna is fitted inside the enclosure.
- Fully weatherised, IP67.

3.2 Parts of the shackle

Part	Description
Bow	marked with the ID of the pin it belongs to and with the working load limit
Pin with enclosure	the load pin measures the load; the enclosure on the pin holds the radio transmitter and the batteries and carries the ID
Load centering bobbin	on the pin between the legs of the bow; centres the load on the pin
Nut	secures the pin
R-clip (retaining clip)	secures the nut
Anti-rotational bracket	keeps the pin from turning in the bow
Measured load	acts on the bobbin, perpendicular to the pin

3.3 Technical data

Measurement

Item	Value
Working load limit (WLL)	4750 kg (4.75 t, 47.5 kN)
Accuracy, original bobbin	typically ±1 % of load or ±25 kg, whichever is greater
Accuracy, non-original bobbin	typically ±2 % of load or ±35 kg, whichever is greater
Calibration	factory calibrated
Zero	zero trim shackle
Units	kg, lbs, tonnes, ton, ton (US), kN

Electronics (1000 Ω bridge, 2.5 mV/V, 3 V, 25 °C)

Item	Value
Offset temperature stability	typ. 1, max. 4 ppm/°C
Gain temperature stability	typ. 3, max. 5 ppm/°C
Offset stability with time	typ. 20, max. 80 ppm of FR
Gain stability with time	max. 30 ppm of FR
Internal resolution	16,000,000 / 24 bits
Noise free (5 ms)	50,000 / 15.5 bits

Mechanical properties

Item	Value
Type	bow shackle with load pin
Bow	surface treated, BS EN 13889
Load pin	aerospace grade stainless steel
Load centering	load centralising bobbin, standard
Anti-rotation	anti-rotational bracket

Rigging profile	< 70 mm
Dimensions	130 × 125 × 62 mm (drawing: section 3.4)
Safety factor	5:1

Wireless transmission, power supply and environment

Item	Value
Radio frequency	2.4 GHz
Transmission distance	up to 800 m
Receivers	choice of receivers; on a PC a base station and free software
Matching (octogon)	EFME USB base station · EFMD handheld
Batteries	2 × AA, Energizer L91
Battery life	section 5.3
Operating temperature	–20 … +55 °C
Storage temperature (no batteries)	–40 … +85 °C
Humidity (excl. batteries)	max. 95 %RH
Protection	IP67, fully weatherised

3.4 Dimensions

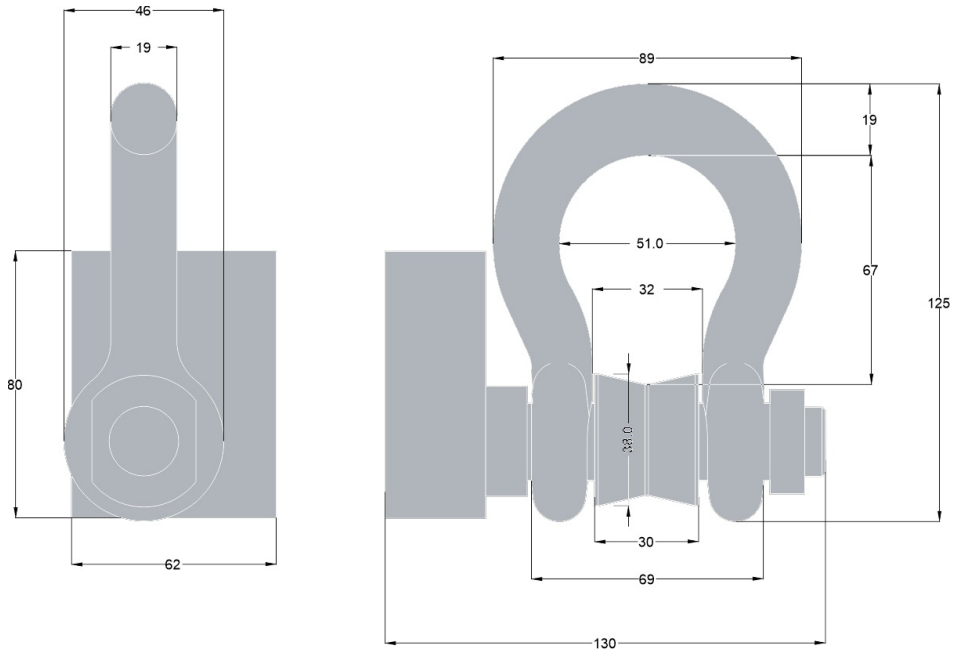

Dimensions in mm.

4 Assembly and use

4.1 Pairs of pin and bow

– Pin and bow are calibrated and load tested together; for the accuracy of the system each pin and bow must be kept as a pair and not interchanged. The bow is marked with the ID of the pin it belongs to; the enclosure on the pin carries the ID as well (section 3.2).

– The pin must be aligned in the same orientation with the bow as it was when calibrated. The shackle is designed to fit together in one orientation: the enclosure is on the left-hand side when viewing the etching on the bow.

– The shackle must be used together with the bobbin, the nut and the retaining clip (R-clip).

4.2 Applying the load

Important To ensure accuracy, the load must be applied perpendicular to the pin and must be centred on the bobbin.

– The accuracy in the technical data applies with the original bobbin. If it is replaced by a non-original bobbin, the accuracy may be reduced (section 3.3).
– Before setting the zero or checking any readings, make sure that the temperature of the shackle has stabilised. When it is moved between different temperatures, it can take up to an hour to reach the local ambient temperature.
– A fixed load such as the weight of a sling can be removed from the readings with the system zero (section 8.2).

5 Batteries

5.1 Inserting and replacing the batteries

– Remove the four screws of the enclosure lid.
– Insert two 1.5 V AA batteries; note the polarity.
– Refit the lid. Do not overtighten the screws.
– Remove the batteries if the shackle is stored for an extended period: leaking batteries can damage the circuitry.

5.2 Choosing batteries

To ensure optimum battery life, use only quality batteries. Recommended: Energizer L91 Ultimate Lithium AA batteries – high capacity (as much as 50 % more than other big brand batteries), wide temperature range, very long shelf life and leak resistant construction. The battery life figures in section 5.3 apply to these batteries.

Important Rechargeable batteries are not suitable.

– Usable capacity depends on temperature: the lower the temperature, the less charge a battery can deliver. Check the operating temperature range of the batteries intended for use.
– Batteries have a shelf life; an alkaline cell typically lasts about 5 years.
– Low internal resistance is important: the transmitter needs a short current peak (300 mA for 250 µs) on start-up, on waking and during low power operation. Batteries with an internal resistance above 150 mΩ may need an additional capacitor module to supply this peak.
– Battery life is optimised by low power mode, a long transmission interval, the required resolution only (sample time), sleep/wake configuration and a suitable sleep delay.

5.3 Battery life

Use (2 × AA Energizer L91, 1 update per second when awake)	Estimated battery life
Asleep	2.5+ years
Continuous operation	3.5 months
8 hours per day	10 months
4 hours per day	1.5 years
2 hours per day	2.8 years

The Toolkit gives an estimate for the actual settings (section 8.1). Battery life depends mainly on the transmission interval and on the time the shackle is awake.

6 The T24 radio system

The LPMB is part of a modular radio system. Its readings can be used by several receivers at the same time, for example the handheld display EFMD, the large display EFMG or a PC with the USB base station EFME. The radios operate licence free in the 2.4 GHz band. The settings and concepts in this chapter are needed to configure, deploy, optimise and troubleshoot such a system.

6.1 Transmitters and receivers

All modules of the system are transceivers, but each works mainly as a transmitter or as a receiver. Transmitters such as the LPMB measure and send messages with the value and status information at a user-defined rate. Receivers use these messages to display, analyse or output them and can also send transmitters to sleep or wake them.

A PC with a base station is needed only to configure the modules, although it may be part of a data collection system. Once configured, the modules work autonomously.

6.2 Radio channel and group key

- Radio channel: the radio band is divided into 15 channels (1 … 15). Two modules can exchange messages only on the same channel. Channel 16 is reserved for pairing.
- Group key: isolates groups of modules on the same channel. Modules see each other's messages only if they share the same group key. The key is defined by the user and has up to 15 alphanumeric characters.
- Group keys were introduced with radio firmware v3.0 (March 2015). Newer modules work with older ones, but then the group key must be left blank.

When the Toolkit pairs with a module, the base station adopts the radio channel and group key of that module. To give a set of modules the same settings, either pair with each one in turn and set channel and group key, or configure the base station first and then use the remote module radio settings tool (Toolkit chapter, "Radio settings").

6.3 ID and data tag

Every module has a unique six-character hexadecimal ID (0 … 9, A … F), for example **FF1234**, allocated in the factory and used for configuration. A transmitter does not broadcast its ID: its messages carry a four-character hexadecimal data tag. In the factory the data tag is set to the last four characters of the ID; it can be changed.

Receivers select messages by data tag. A transmitter can therefore be replaced without reconfiguring the receivers: give the replacement the same data tag, radio channel and group key.

6.4 Operating modes and sleep delay

Mode	What the transmitter does
Normal	takes a reading, sends a message and enters a very low power state until the next reading
Configuration	pauses its messages and stays awake so that it can be configured; entered by pairing with the Toolkit; afterwards the module returns to normal mode
Sleep	sent to sleep by other modules, or goes to sleep itself when its messages are no longer used; can be woken on demand by other modules or by software via the base station

Sleep delay: most receivers and the T24 software send stay-awake messages when they receive messages from a transmitter, usually every 5 seconds. If the sleep delay has elapsed without a stay-awake message, the transmitter goes to sleep. Set the sleep delay to at least 10 seconds; it can be set up to one hour, for example when the receiver is out of range for a while but the transmitter has to keep working. Usual values are 30 to 300 seconds. A sleep delay of 0 disables the function: the transmitter then sleeps only when it is told to.

6.5 Pairing

Pairing finds and matches the radio settings (radio channel and group key) of two modules and can put a transmitter into configuration mode. Because a module can be built deep into other equipment, pairing is triggered by removing and re-applying the module's power – for the LPMB: open the enclosure lid (four screws) and take one battery out.

- Pairing from the T24 Toolkit: remove power from the module, click **Pair** in the Toolkit and re-apply power within 10 seconds. The base station adopts the radio settings of the module and puts it into configuration mode. Pairing with the Toolkit does not change the radio settings of the module.
- Pairing from a receiver: some receivers, for example handheld displays, can pair with a transmitter without the Toolkit (see the manual of the receiver). The transmitter then adopts the radio settings of the receiver and simply continues in normal mode.
- Soft pairing: when the power of the module cannot be reached, the Toolkit can connect without a power cycle. The base station must be set to the module's radio channel and group key, and the unique ID of the module must be known. Transmitters with a transmission interval above 5 seconds may be difficult to soft pair; in high-traffic or noisy radio environments soft pairing may fail – then pair by power cycling.

6.6 Radio traffic, repeaters and logging

– Each message takes about 3 ms. In practice about 200 messages per second are available per radio channel – for example 2 modules at 100 messages per second or 100 modules at 1 message per second. Modules on the same channel share this capacity even with different group keys; the more transmitters, the more messages are lost through collisions.

– Modules that do not need to communicate with each other can be put on separate channels.

– A repeater retransmits messages to increase the range or to bypass obstacles. It must use the same radio channel and group key as the modules it repeats. The repeater subgroup setting (default 0) limits which messages are repeated; it only needs changing when the channel is very full.

– Transmitters send at their own interval, timed from wake-up or power-on, without synchronisation. Logging software records the last value received from each transmitter, so values in one log record can be up to one transmission interval apart. If readings must be taken within a certain time of each other, set the transmission interval to that time; the log interval should always be longer than the transmission interval.

7 Configuration with the T24 Toolkit

7.1 What is needed

– The T24 Toolkit configuration software for Windows. It is free of charge; please ask octogon for the current version. Install it by running **setup.exe** and following the prompts.

– A base station connected to the PC, for example the USB base station EFME: plug it into a USB port.

– The LPMB, with its power accessible for pairing.

In the Toolkit, every item that can be changed is shown in green. Click it to open a dialog with a slider, a text box or a list for the new value.

Important Do not pair with several modules from several instances of the Toolkit at the same time.

7.2 Connecting to the LPMB

– Base station communications: select the interface type of the base station (for a serial base station also the COM port and baud rate). The base station address is usually 1. Click **Home**. If no connection is made, the Toolkit stays on this page – check that the base station is powered and correctly connected.

– Pairing: on the **Home** page remove power from the LPMB (open the enclosure lid (four screws) and take one battery out), click **Pair** and re-apply power within 10 seconds. When the connection is made, the Toolkit shows the Information page. If pairing fails, try again.

– While the Toolkit is connected, the transmitter usually stops its normal transmissions. It returns to normal operation when configuration is complete.

– To configure the attached base station itself, hold the Shift key and click **Pair**.

– If the power of the module cannot be reached, use soft pairing: click the **Click Here** link at the bottom of the Home page and follow the prompts (see "Pairing" in the previous chapter).

7.3 Information page

Shows the connected module. The name can be changed to a short description that helps to recognise the module later. The feature symbols show what the module supports (coloured) or not (greyed out): calibration protected, group keys supported, group key configured, extended range radio (introduced 2015) and v4.0 radio (better performance in hostile radio environments).

7.4 Battery and radio levels

– LQI (link quality indicator): 0 ... 100. Communication is possible across this range; towards 0 it may become intermittent.

– Battery voltage of the transmitter, with the adjustable **Low Battery Level** at which the module reports a low battery; below that level the bar turns orange. At 2.1 V the module stops working.

– **Advanced**: RSSI, the received level, from about –30 dB (good signal) to –98 dB (weak signal), and CV, the correlation value, from 55 (poor) to 110 (excellent).

7.5 Radio settings

Item	Function
Channel	radio channel 1 … 15, default 1; use the spectrum analyser to find a clean channel
Group Key	only modules with identical group keys communicate; visible only on modules that support group keys; leave blank to work with older modules
Reset Module Only	new radio settings take effect only after a reset or power cycle: this button makes the module adopt them and keeps the base station on the old settings
Reset Module and Base Station	makes the module and the base station adopt the new settings and re-connects
Repeater Subgroup (Advanced)	default 0: every repeater repeats the messages of this module
Remote module radio settings tool (Advanced)	sets a batch of modules to the radio settings of the base station: remove power from the module, click the **Click Here** link, apply power; repeat for each module

7.6 Save and restore

Save writes all settings of the connected module, including the calibration, to a file with the extension **.tcf**. **Restore** loads such a file into the same or another module and overwrites all its settings, including the user calibration.

7.7 Spectrum analyser and channel monitor

The spectrum analyser shows the radio signal levels on all channels. Use it for a site survey before installation and when communication is poor:

- White trace: the real-time signal level – shows where other radios are active.
- Shaded area: the peak level over time – shows where traffic is strongest.
- Red trace: the minimum level. In a quiet environment it is not visible. As long as it stays below the clear channel assessment (CCA) threshold of the radios, the system works; prefer channels with a low minimum level. Above about –95 dB the achievable range starts to drop.
- Radio firmware up to v3.x does not transmit while the signal is above its CCA threshold; v4.0 has a revised threshold for noisy environments, v5.0 an adaptive one.
- A double-click on the chart resets the peak and minimum values.

The channel monitor lists the messages received from transmitters: data tag, number of messages, rate, link quality, value and errors. The base station must be on the same radio channel and use the same group key as the transmitters. Buttons: channel tabs (change the channel of the base station), **Clear List**, **Wake All** (wakes all modules on the channel with the matching group key), **Start Logging** (CSV file with data tag, elapsed time in ms and value), **View Last Log** and **Move Group Channel** (moves all modules with the same channel and group key, and then the base station, to a new channel – only modules that can be woken are moved).

8 Shackle settings and calibration

The LPMB reports to the Toolkit as a strain transmitter module and shares all configuration settings and functions with these modules. Launch the T24 Toolkit and pair with the shackle (chapter 7); the pages below set the transmission, the calibration and the advanced settings.

Important The shackles are factory calibrated. Unless you are recalibrating, be careful not to alter the calibration settings.

8.1 Data rates and quality

This page sets the rate at which data is transmitted and the quality. With low power mode selected and some further information entered, the Toolkit also gives a guide to the achievable battery life.

Item	Function
Transmit Interval	transmission rate in milliseconds; default 1000, one transmission per second. Slow it down to achieve a longer battery life
Sample Time	time in milliseconds during which the input is sampled before the value is transmitted; should remain at 5 ms
Low Power Mode	should be set to Yes

Battery Type	not a module setting – information for the battery life guide: a preset battery or custom with your own capacity. Offers to change the **Low Battery Level** if the level suitable for the chosen battery is not the one currently set
Usable Capacity	not a module setting – capacity in Ah for the battery life guide, calculated from the battery data sheet down to 2.1 V (1.05 V per cell for two AA cells); generally lower than the advertised capacity
Sensor Resistance	should be set to 1000 Ω
Usage Per 24 Hour Period	hours per 24 hour period during which a handheld is switched on and communicates with the shackle

The battery life guide assumes the best case: 20 °C and a battery with suitably low internal resistance, or a suitable capacitor across the battery (chapter 5). Temperature and internal resistance of the battery are not taken into account.

8.2 Calibration

Here the shackle can be calibrated and a system zero set. Semi-automatic calibration with known inputs, including linearisation, applied automatically:

- Decide on the number of calibration points: 2 for a linear calibration, 3 … 9 for a calibration with linearisation.
- Decide which loads will be applied at each point, in ascending order.
- Enter for each point the value (in the required units) that the shackle shall read.
- Apply each input in turn, allow it to settle and click **Acquire** for that point. A point can be acquired again; **Start Again** restarts the calibration.

Important The mV/V signal must rise from one calibration point to the next.

The bottom of the page shows the input value and, from the second point on, the calibrated value. **System Zero** removes a fixed value from all subsequent readings, for example the weight of a sling: apply it and click the button. The system zero is stored in non-volatile memory in the shackle and can be edited with **Advanced**.

8.3 Calibration by certificate

Click **By Cert.** to enter the calibration from a calibration table or certificate without applying loads: enter the number of points (2 … 9), for each point the input value (e.g. in mV/V) and the required value in engineering units, then click **Calibrate**.

8.4 Advanced calibration

Click **Advanced** to enter gain and offset for each calibration point directly. Between the points gain and offset are interpolated linearly; below point 1 and above point 9 the input is extrapolated. The system zero can be set here, or set to zero to remove its effect.

The input (mV/V) is compared with the points starting from point 1; for the point found, the reading is calculated as: value = (input × gain) – offset.

8.5 Advanced settings

Item	Function
Sleep Delay	time in seconds after which the shackle returns to deep sleep if no stay-awake message is received from a receiver; default 60 s
Data Tag	identifies the transmitted data; default the last 4 digits of the serial number. Change it only if two transmitters on the same channel have the same last 4 characters in their ID, and update the settings of the receiver
Startup Time	should be set to 0
LED Mirror to Digital Output	should be set to Yes
Transmit Power	0 … 100 %, default 100 %

These settings do not normally need to be changed.

9 Antenna and radio range

The antenna is fitted inside the enclosure, so there are no specific mounting requirements. Transmission distance of the LPMB: up to 800 m (technical data, section 3.3). The range achieved depends strongly on the surroundings.

At 2.4 GHz the radio performance depends strongly on the surroundings. Any structure near the radios causes obscuration (an obstruction masks the line of sight – less range), distortion of the coverage pattern (objects close to the antenna) and reflection (signals arriving by indirect paths – less range or poor link quality). The result is a lower RSSI, more lost messages and, in extreme cases, no signal at all.

- Keep line of sight between the modules, and keep objects and structures at least 1 m away from the antennas wherever possible.
- A small change of the antenna height above ground often improves reception.
- Under water the range is only about 100 mm, depending on the message rate. Best results come from low message rates and water-proofed antennas immersed in the water, rather than water-tight enclosures containing the antennas.

10 Inspection, maintenance and recalibration

10.1 Before and after every use

- As with all rigging equipment, inspect the shackle before and after every use: all components must be present and correct (bow, pin, bobbin, nut and R-clip) and the IDs must match.
- All load bearing components must be free from cuts, nicks, cracks, gouges or excessive wear and distortion.
- Take damaged shackles or components out of service and return them to octogon to arrange refurbishment or scrapping. If you replace or swap any load bearing parts yourself, the calibration of the unit becomes void.
- Check before every use that all settings are as expected, above all the system zero and the units.

10.2 Checking zero and readings

- Before moving the zero offset or checking readings, make sure that the temperature of the shackle has stabilised (up to an hour after a change of temperature).
- Damage to the shackle or its calibration can happen at any time. If the zero offset has to be moved significantly, further investigation is required, for example a thorough examination and a calibration check with a known load.
- Keep records of every calibration check, so that any movement over time can be seen.
- If the readings are out by more than 1 % or 25 kg, or more than 50 kg have to be zeroed out, return the shackle to octogon to arrange recalibration. For the most accurate reading the bobbin must be centred and the pin perpendicular to the load.

10.3 Thorough examination and recalibration

- Use these measures together with your own thorough examination routine, at the same intervals as set for normal shackles. The intervals depend on local regulations but are unlikely to be less frequent than every 6 months. Keep records of all thorough examinations.
- In line with the guidance of the Lifting Equipment Engineers Association (LEEA), returning the shackle to the factory for recalibration every twelve months is recommended. The output can also be checked with a known load more often.

10.4 Maintenance

- There are very few maintenance requirements. Keep the shackle and the battery enclosure clean, the threads clear of debris and protected from corrosion.
- Do not overtighten the lid screws when replacing the batteries (chapter 5).
- Remove the batteries if the shackle is stored for an extended period.

11 Troubleshooting

Symptom	What to check
The Toolkit stays on the base station page	Check that the base station is powered and correctly connected; for a serial base station check COM port and baud rate.
Pairing fails	Remove power, click **Pair**, re-apply power within 10 s; try again. Soft pairing can fail with transmission intervals above 5 s or in busy or noisy radio environments – pair by power cycling.

No readings in the channel monitor or on a receiver	Base station and receivers must be on the same radio channel and use the same group key as the transmitter. The transmitter may be asleep: wake it (**Wake All**) and check its sleep delay (at least 10 s).
Group key setting not available	The module was built before group keys were introduced (2015). To work together with such modules, leave the group key blank.
Two transmitters show the same data	Both have the same data tag (same last 4 characters of the ID): change the data tag of one of them and pair with the receiver again.
Intermittent communication, short range	Check LQI, RSSI and CV (Toolkit, battery and radio levels); look for a quieter channel with the spectrum analyser; keep metal and other objects away from the antennas.
Short range only near the PC	Unshielded USB 3.0 ports can emit radio noise. Use a USB port away from USB 3.0 ports or a short USB extension cable.
Transmitter stops working	Battery voltage too low – the module stops at 2.1 V. Replace the batteries and check the low battery level.
Readings out by more than 1 % or 25 kg, or more than 50 kg have to be zeroed out	Return the shackle to octogon to arrange recalibration (chapter 10).
Readings drift after the shackle was moved	Wait until the temperature of the shackle has stabilised – up to an hour – before setting the zero or checking readings (chapter 10).
Readings less accurate than expected	Check that pin and bow are a matching pair in the calibrated orientation, that the original bobbin is fitted, and that the load acts perpendicular to the pin and centred on the bobbin (chapter 4).

12 Conformity

CE. The T24 product range complies with the EMC directive 2014/30/EU and the radio equipment directive 2014/53/EU (European Community, Switzerland, Norway, Iceland and Liechtenstein). The EU declaration of conformity for the T24 product range, dated 16 October 2017, names the LVD directive 2014/35/EU, the EMC directive 2014/30/EU, the RoHS directive 2011/65/EU and the radio equipment directive 2014/53/EU, based on the harmonised standards EN 61326-1:2013, EN 61326-2-3:2013, EN 61010-1:2010 and EN 300 328 V2.1.1. The declaration is available from octogon on request.