OCTOGON

MANUAL

LMLBD

MOUNTING KIT FOR COMPRESSION - LOW PROFILE LOAD CELLS

Mounting and installation manual

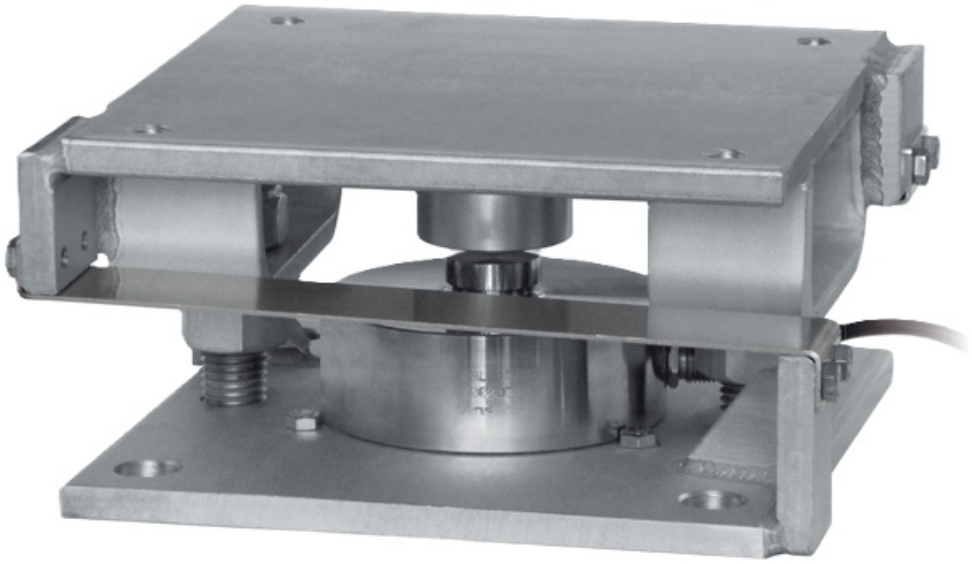

Document	Version	Date	Applies to
Mounting and installation manual	V00x	11/2026	LMLBD, all nominal loads

octogon GmbH · Roseggerstrasse 16 · 8700 Leoben · Austria · office@octogon.org

Contents

1 About this manual 2
2 Device and mounting notes 3
2.1 Overview 3
2.2 Nominal load (FS) 3
2.3 Description 3
2.4 Dimensions and technical specifications 4
2.5 Complementary accessories 6
3 Recommendations for correct installation 8
3.1 Sizing and installation 8
3.2 Mechanical restraints, welding, external influences 8
3.3 Earthing 8
4 Electrical connection and testing of the load cell 9

1 About this manual

This manual describes mounting and installation of the LMLBD mounting kit. Manufacturer type: V15000 V100000.

The device data, mounting notes and figures in chapter 2 are taken from the LMLBD datasheet (LMLBD Datasheet V03x EN). Chapter 3 contains the general recommendations for correct installation, chapter 4 the reference to the manual of the load cell used.

Important Read the mounting notes (chapter 2) and the recommendations for correct installation (chapter 3) completely before mounting. Failure to follow the installation recommendations will be considered a misuse of the equipment.

2 Device and mounting notes

2.1 Overview

Characteristic	According to datasheet
Designation	MOUNTING KIT FOR COMPRESSION - LOW PROFILE LOAD CELLS
Features	AISI 304 STAINLESS STEEL UP TO 100 000 KG APPLICATION RANGE

2.2 Nominal load (FS)

kg	kN	NET WEIGHT (kg)	FOR LOAD CELLS
30 000	300	9	LKLA (15 000 kg) – LKLB (30 000 kg) – LKLC (30 000 kg)
50 000	500	17.5	LKLA (30 000 kg) – LKLB (50 000 kg)
100 000	1 000	33.5	LKLA (50 000 kg) – LKLA (100 000 kg)

Load cell not included

2.3 Description

- AISI 304 stainless steel upper and lower plates.
- AISI 304 stainless steel laminas against lateral forces.
- Anti-tilt constraint consisting of two threaded rods with self-locking nut.

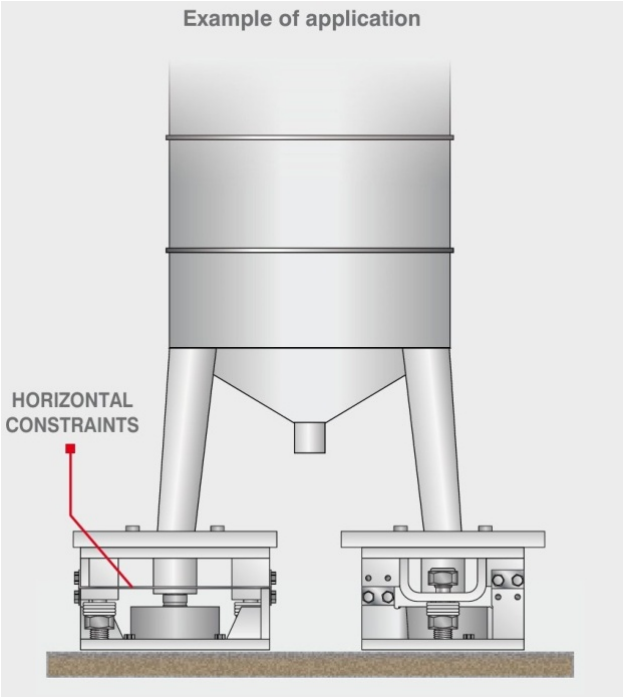

HORIZONTAL CONSTRAINTS
ORIENTATION
IN STRUCTURES WITH
3-POINT SUPPORT

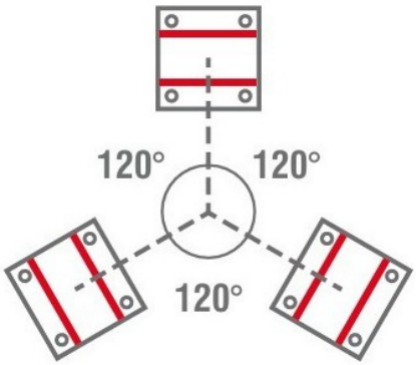

HORIZONTAL CONSTRAINTS
ORIENTATION
IN STRUCTURES WITH
4-POINT SUPPORT

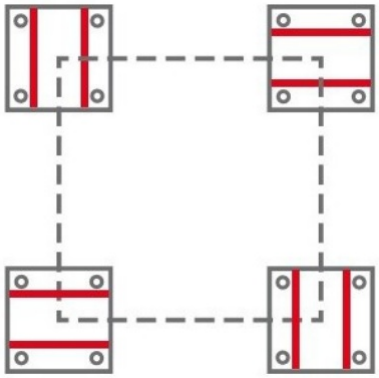

2.4 Dimensions and technical specifications

Upper and lower plates 2 must rest completely on not deformable surfaces. To ensure the stability of the structure, the system designer must predict any further precaution against side shifts and anti-tilt in function of: knocks and vibrations, wind effect, seismic conditions and hardness of support structure.

– Install the weighed system using only the mounting kit without the load cell 1 and inserting in its place a piece of pipe (1-2 mm higher than the load cell).

– To finish the installation (weldings, etc.), remove the piece of pipe and then removing the bolts that fix the load cell 7 , insert the load cell in the mounting kit.

– Connect lower and upper plates 2 to the earthing system, then loosen the nuts 5 ; verify that the threaded rod 4 slides into the hole; turn the anti-tilt nuts 6 to a distance of 1 mm from the plate.

– Tighten the three bolts to fix the load cell 7 .

Upper plate

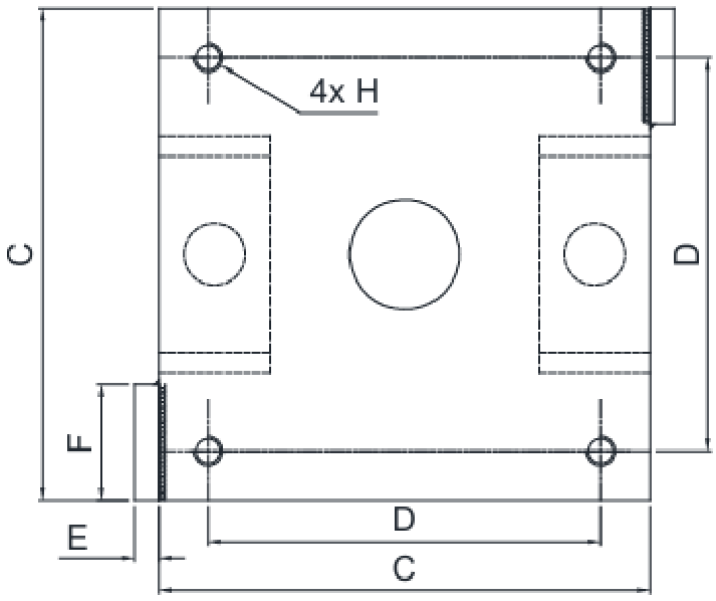

Lower plate

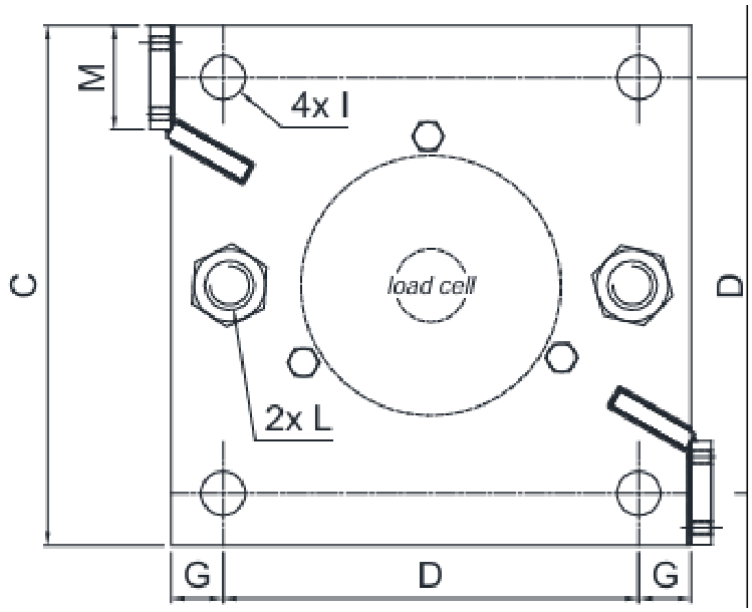

Dimensions (mm)	A	B	C	D	E	F	G	H	I	L	M	Weight
300 kN	102	10	200	160	10	47	20	M12x1.75	Ø17	M20x2.5	40	9 kg
500 kN	132	12	250	185	12	70	32.5	M18x2.5	Ø20	M24x3	60	17 kg
1 000 kN	155	15	320	250	15	95	35	M20x2.5	Ø23	M30x3.5	70	34 kg

1 Load cell.

2 AISI 304 stainless steel upper and lower plates.

3 AISI 304 stainless steel laminas with

horizontal constraint function.

4 Threaded rod.

5 Nut to be used as jack.

6 Anti-tilt self-locking nut.

7 M6 bolts to fix the load cell.

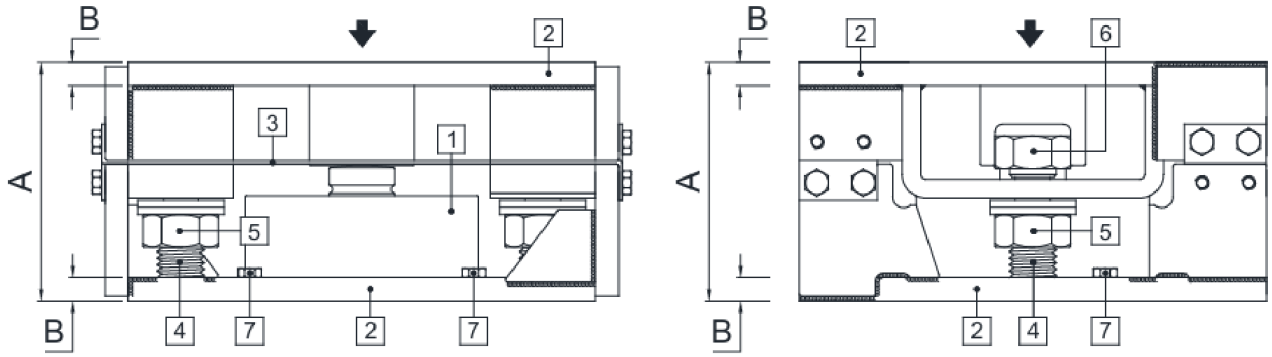

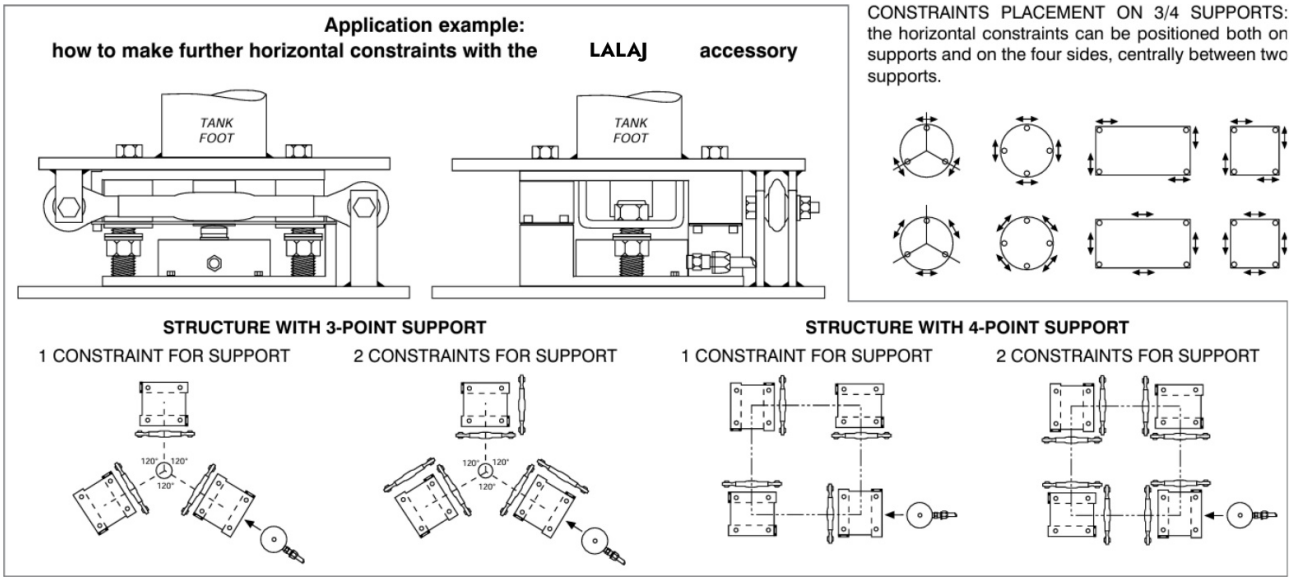

2.5 Complementary accessories

AISI 304 stainless steel shim: 30 000 kg; 50 000 kg; 100 000 kg

h 0.5 mm; h 1 mm; h 2 mm; h 0.5 mm; h 1 mm; h 2 mm; h 0.5 mm; h 1 mm; h 2 mm



AISI 304 stainless steel adapter:

30 000 kg for load cells

50 000 kg for load cells

100 000 kg for load cells

Ø82 mm; Ø100 mm; Ø126 mm



Galvanized steel turnbuckle with dual ball-and-socket.

Net weight: 2.10 kg

Working load: 2 500 kg

Ultimate overload: 10000 kg



Galvanized steel anchor plate for galvanized steel turnbuckle

Net weight: 1.5 kg



3 Recommendations for correct installation

3.1 Sizing and installation

Sizing of load cells capacity

For safety reasons, in case of static weighing, it is advisable to use the load cells at a maximum of 70–80 % of its nominal capacity (assuming that the load is uniformly distributed over the entire weighed structure); depending on the handling mode of the load to weigh, consider to further reduce the % of load with respect to the nominal capacity (ex.: forklifts handling, bridge cranes, etc.).

In case of weighing with dynamic loads, the installer has to estimate the thrust speed, the acceleration, the frequency, etc.

Installing load cells

The load cells must be placed on rigid, stable in-line structures; it is important to use the mounting kits for load cells, in order to compensate for any misalignments of the support plates.

3.2 Mechanical restraints, welding, external influences

Mechanical restraints (pipes, etc.)

When pipes are present, we recommend the use of hoses and flexible couplings with open mouthpieces with rubber protection; in case of hard pipes, place the pipe support or anchor bracket as far as possible from the weighed structure (at a distance at least 40 times the diameter of the pipe).

Welding

Avoid welding with the load cells already installed. If this cannot be avoided, place the welder ground clamp close to the required welding point to prevent sending current through the load cell body.

Windy conditions – knocks – vibrations

The use of mounting kits is strongly recommended for all load cells, in order to compensate for any misalignments of the support plates. The system designer must ensure that the plant is protected against lateral shifting and tipping relating to: shocks and vibration; windy conditions; seismic conditions in the installation setting; stability of the support structure.

3.3 Earthing

Earthing the weighed structure

By means of a copper wire with suitable cross-section, connect the cell upper support plate with the lower support plate, then connect all the lower plates to a single earthing system. Electrostatic charges accumulated because of the product rubbing against the pipes and the weighed container walls are discharged to the ground without going through or damaging the load cells. Failure to implement a proper earthing system might not affect the operation of the weighing system; this, however, does not rule out the possibility that the cells and connected instrument may become damaged in the future. It is forbidden to ensure earthing system continuity by using metal parts contained in the weighed structure.

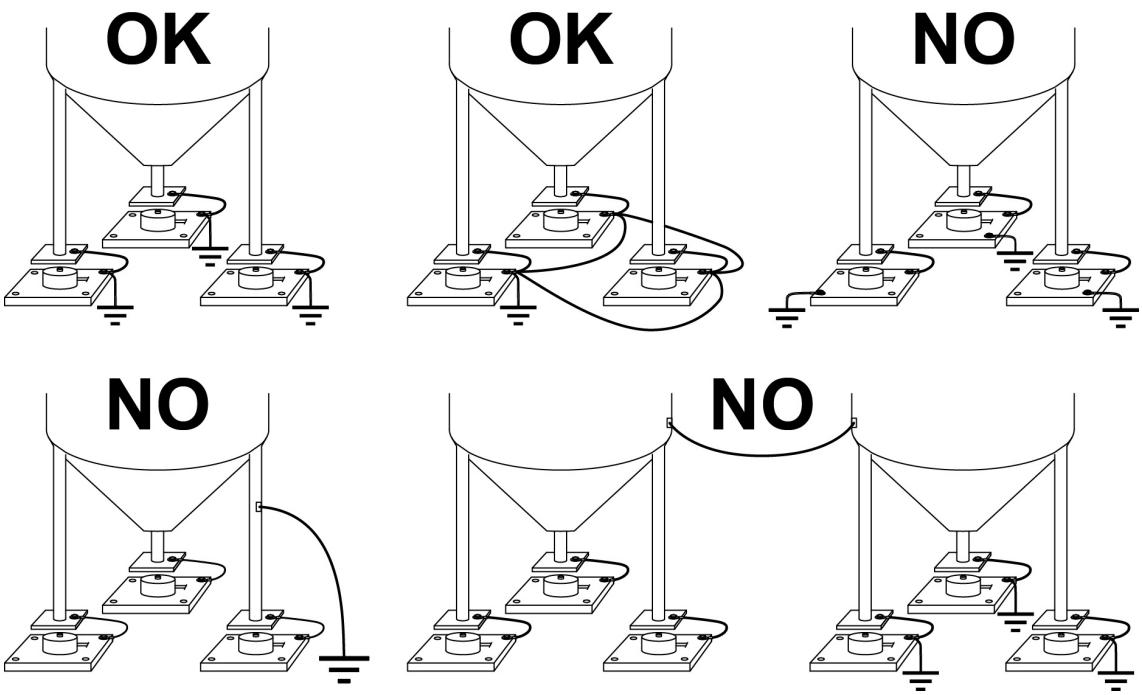

Earthing of the weighed structure: OK = correct design, NO = incorrect design

Important Failure to follow the installation recommendations will be considered a misuse of the equipment.

4 Electrical connection and testing of the load cell

Electrical connection, cable routing and cable protection, connection of several load cells in parallel, electronic instrumentation and testing of the load cell are not part of this manual. Refer to the manual of the load cell used.

Suitable load cells according to the datasheet: LKLA, LKLB, LKLC.