OCTOGON

MANUAL

LMLBB

MOUNTING KIT FOR SHEAR BEAM LOAD CELLS

Mounting and installation manual

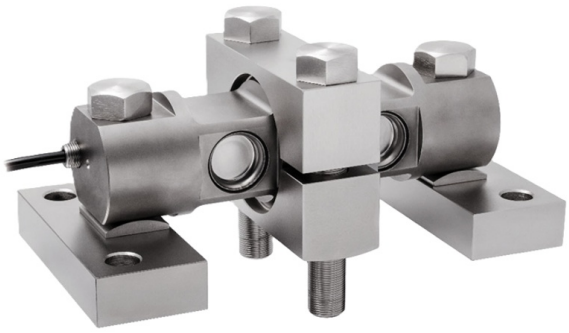

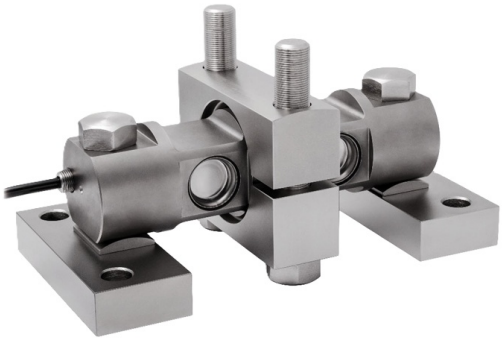

Document	Version	Date	Applies to
Mounting and installation manual	V00x	11/2026	LMLBB, all nominal loads

octogon GmbH · Roseggerstrasse 16 · 8700 Leoben · Austria · office@octogon.org

Contents

1 About this manual 2
2 Device and mounting notes 3
2.1 Overview 3
2.2 Max static load 3
2.3 Description 3
2.4 Technical specifications 3
2.5 Example of application 3
2.6 Dimensions (mm) 4
3 Recommendations for correct installation 5
3.1 Sizing and installation 5
3.2 Mechanical restraints, welding, external influences 5
3.3 Earthing 5
4 Electrical connection and testing of the load cell 6

1 About this manual

This manual describes mounting and installation of the LMLBB mounting kit. Manufacturer type: VDTX.

The device data, mounting notes and figures in chapter 2 are taken from the LMLBB datasheet (LMLBB Datasheet V01 EN). Chapter 3 contains the general recommendations for correct installation, chapter 4 the reference to the manual of the load cell used.

Important Read the mounting notes (chapter 2) and the recommendations for correct installation (chapter 3) completely before mounting. Failure to follow the installation recommendations will be considered a misuse of the equipment.

2 Device and mounting notes

2.1 Overview

Characteristic	According to datasheet
Designation	MOUNTING KIT FOR SHEAR BEAM LOAD CELLS
Load direction	COMPRESSION
Features	SEE DESCRIPTION UP TO 60 KLB/27 TON APPLICATION RANGE

2.2 Max static load

kg	kN	Net weight (kg)	For load cells
27 000	270	16.9	LDLA (13.6 t ÷ 27 t)

Load cell not included

2.3 Description

- Nickel-plated steel alloy mounting kit for rigid attachment of the load cell.
- It prevents horizontal movement.

2.4 Technical specifications

The base plates must be placed on non-deformable surface. To ensure the stability of the structure, the system designer must predict any further precaution against side shifts and anti-tilt in function of: knocks and vibrations, wind effect, seismic conditions and hardness of support structure.

2.5 Example of application

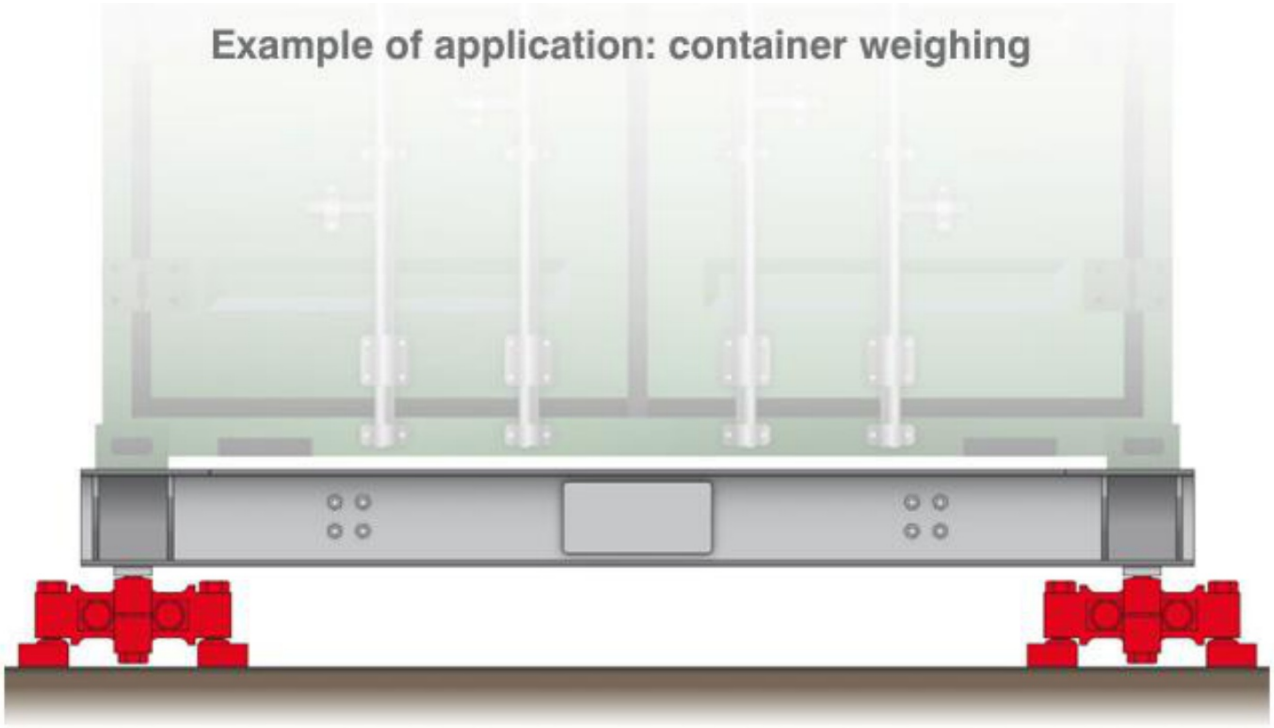

2.6 Dimensions (mm)

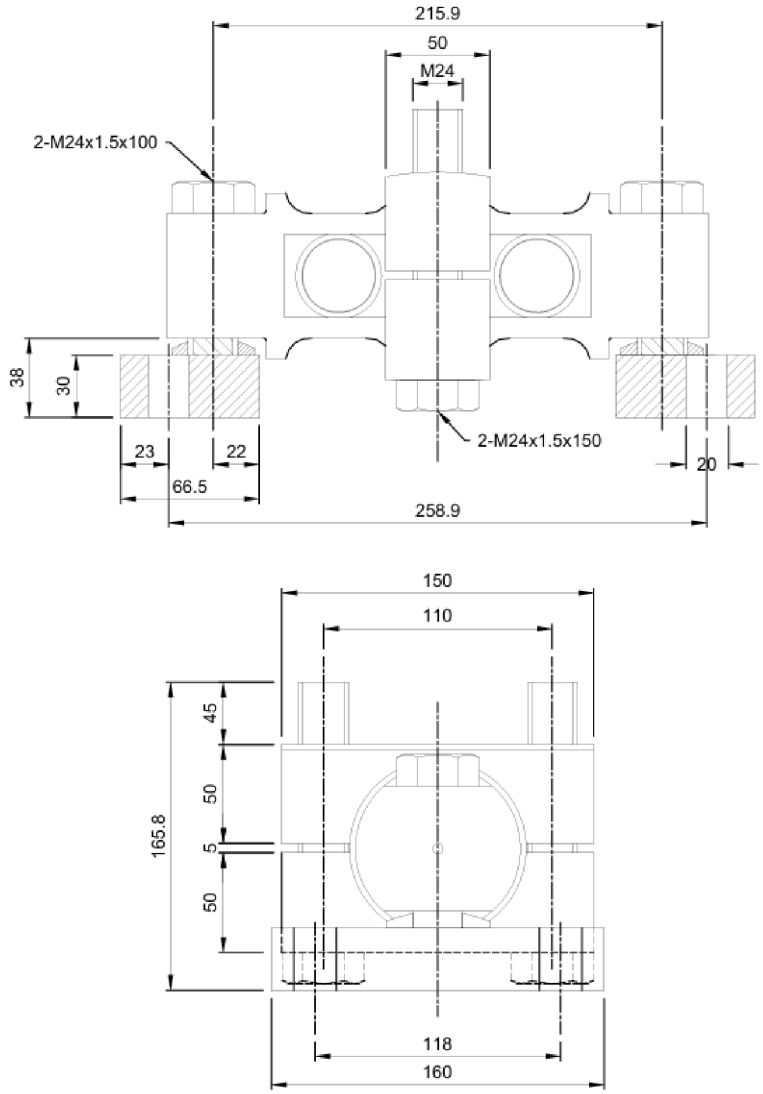

3 Recommendations for correct installation

3.1 Sizing and installation

Sizing of load cells capacity

For safety reasons, in case of static weighing, it is advisable to use the load cells at a maximum of 70–80 % of its nominal capacity (assuming that the load is uniformly distributed over the entire weighed structure); depending on the handling mode of the load to weigh, consider to further reduce the % of load with respect to the nominal capacity (ex.: forklifts handling, bridge cranes, etc.).

In case of weighing with dynamic loads, the installer has to estimate the thrust speed, the acceleration, the frequency, etc.

Installing load cells

The load cells must be placed on rigid, stable in-line structures; it is important to use the mounting kits for load cells, in order to compensate for any misalignments of the support plates.

3.2 Mechanical restraints, welding, external influences

Mechanical restraints (pipes, etc.)

When pipes are present, we recommend the use of hoses and flexible couplings with open mouthpieces with rubber protection; in case of hard pipes, place the pipe support or anchor bracket as far as possible from the weighed structure (at a distance at least 40 times the diameter of the pipe).

Welding

Avoid welding with the load cells already installed. If this cannot be avoided, place the welder ground clamp close to the required welding point to prevent sending current through the load cell body.

Windy conditions – knocks – vibrations

The use of mounting kits is strongly recommended for all load cells, in order to compensate for any misalignments of the support plates. The system designer must ensure that the plant is protected against lateral shifting and tipping relating to: shocks and vibration; windy conditions; seismic conditions in the installation setting; stability of the support structure.

3.3 Earthing

Earthing the weighed structure

By means of a copper wire with suitable cross-section, connect the cell upper support plate with the lower support plate, then connect all the lower plates to a single earthing system. Electrostatic charges accumulated because of the product rubbing against the pipes and the weighed container walls are discharged to the ground without going through or damaging the load cells. Failure to implement a proper earthing system might not affect the operation of the weighing system; this, however, does not rule out the possibility that the cells and connected instrument may become damaged in the future. It is forbidden to ensure earthing system continuity by using metal parts contained in the weighed structure.

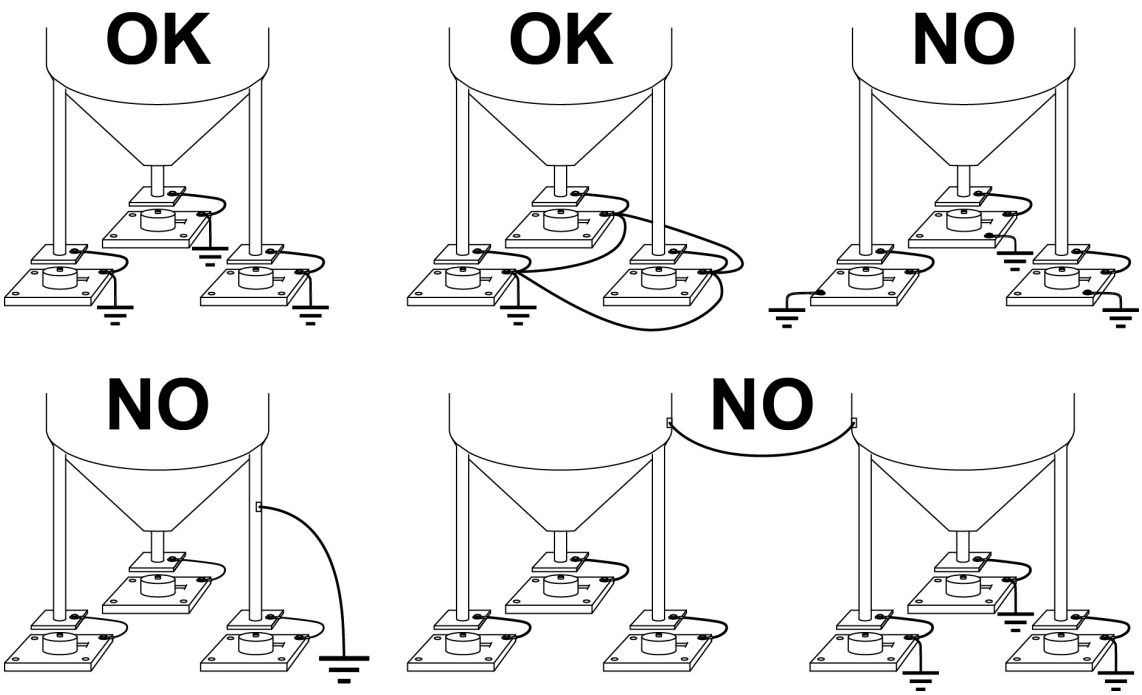

Earthing of the weighed structure: OK = correct design, NO = incorrect design

Important Failure to follow the installation recommendations will be considered a misuse of the equipment.

4 Electrical connection and testing of the load cell

Electrical connection, cable routing and cable protection, connection of several load cells in parallel, electronic instrumentation and testing of the load cell are not part of this manual. Refer to the manual of the load cell used.

Suitable load cells according to the datasheet: LDLA.