OCTOGON

MANUAL

LGLA

APPROVED DIGITAL CRANE SCALE

Installation and user manual



Document	Version	Date	Applies to
Installation and user manual	V00x	11/2026	LGLA

This manual describes the LGLA approved digital crane scale with remote control: safety, keys and display, operation, setup menu, parameters, calibration, battery, messages and troubleshooting.

octogon GmbH · Roseggerstrasse 16 · 8700 Leoben · Austria · office@octogon.org

Contents

1 About this manual ... 2
1.1 Symbols ... 2
2 Safety, warranty and disposal ... 3
2.1 Safety regulations ... 3
2.2 Warranty ... 3
2.3 Guidelines for proper disposal ... 3
3 Product description ... 3
3.1 Design and scope of delivery ... 3
3.2 Functions ... 3
3.3 Versions ... 4
4 Technical specifications ... 4
5 Dimensions ... 5
6 Crane scale interfaces ... 6
6.1 Keys functions on crane scale ... 6
6.2 Keys functions on remote control ... 6
6.3 Display ... 7
7 Operation ... 7
7.1 Turning on/turning off ... 7
7.2 Weight zero-setting ... 7
7.3 Automatic zero setting at power-on ... 7
7.4 Net weight function (tare weight application) ... 7
7.5 Sleep mode ... 8
7.6 Display in sub-divisions ... 8
8 Setup menu ... 8
8.1 Menu access ... 8
8.2 Navigating the menus ... 8
8.3 Entering numeric values ... 8
8.4 Access to legally relevant parameters ... 8
9 Parameters ... 9
9.1 Overview ... 9
9.2 Overload log ... 9
10 Calibration ... 10
11 Battery ... 10
12 Display messages ... 10
13 Troubleshooting ... 11
14 Directives and standards ... 11

1 About this manual

The LGLA is an approved digital crane scale in die-cast aluminium with an upper shackle, a lower hook, a backlit display and an internal rechargeable battery. The basic functions are operated with the keys of the crane scale or with the equivalent keys of the remote control.

1.1 Symbols

Notice	Meaning
Caution	Risk of electric shock, or: this operation must be performed by skilled personnel.
Important	Pay particular attention to the following instructions.
Note	Further information.

Display texts are shown in bold, for example **F0 CAL**; keys in capital letters, for example ZERO.

2 Safety, warranty and disposal

2.1 Safety regulations

Please follow the instructions below to use the digital crane scale safely and correctly:

– Never exceed the maximum capacity indicated on the crane scale. Exceeding the maximum capacity will damage the load cell and invalidate the safety and warranty conditions.
– Avoid leaving the load hanging on the crane scale for a long time.
– Periodically check the integrity of the hook and shackle; should they be damaged, do not replace them directly but refer to the authorized dealer to replace them with genuine components.
– Regularly check the battery charge status. Use the supplied battery charger 100-240 VAC to recharge.
– If required, rotate the load rather than the crane scale.
– Never use the crane scale in the rain.
– Do not install the crane scale in locations exposed to direct sunlight.
– Use the crane scale in ventilated and dry locations.
– Do not use the crane scale in locations exposed to wind loads.
– Do not try to self-repair the crane scale; always get in touch with the authorized dealer.

2.2 Warranty

The general terms and conditions contained in the sales documentation shall apply.

2.3 Guidelines for proper disposal

– This is electrical/electronic equipment and cannot be disposed of as municipal solid waste, but must be delivered to a recycling center.
– Improper use or disposal can pollute the environment or damage human health.
– Non-compliance with these guidelines will be penalized in accordance with the regulations in force in the country of destination.
– It is recommended to dispose of the packing and packaging as required by local regulations.

3 Product description

3.1 Design and scope of delivery

– Approved die-cast aluminium crane scale complete with upper shackle and lower hook; suitable for bridge crane.
– 6-digit backlit LCD display (30 mm height).
– IP65 protection rating.
– Rechargeable internal battery 7.4 V, 5200 mAh capacity; operating time 60 hours.
– External battery charger 100-240 VAC included.
– Remote control with range up to 20 m line of sight.

3.2 Functions

– Semi-automatic tare (net/gross weight).
– Weight zero setting and tare weight zero setting.
– High resolution visualization.
– Remote control functions: high resolution, zero, net weight, stand-by.
– Energy saving mode.

3.3 Versions

Nominal load (kg)	kN	Division e (kg)	Net weight (kg)
600	6	0.2	8.5
1500	15	0.5	8.5
3000	30	1	9.9
6000	60	2	17
12000	120	5	20

4 Technical specifications

Item	Value
Nominal loads	600 / 1500 / 3000 / 6000 / 12000 kg (section 3.3)
Working load limit without releasing the load	300 % of full scale
Safe overload	200 % of full scale
Protection rating	IP65
Working temperature	–10 … +40 °C
Display	6-digit backlit LCD display, 30 mm height
Power supply	rechargeable internal battery 7.4 V, 5200 mAh capacity; external battery charger 100-240 VAC included
Operating time	60 hours
Remote control range	up to 20 m line of sight
Compliance	CE, RoHS, REACH
Certifications	OIML R76:2006, class III, 3000 divisions; conformity assessment (initial verification)
Machinery directive	compliant to machinery directive 2006/42/EC and EN 13155:2003/A2:2009
Calibration	factory-calibrated; ISO 17025 calibration and calibration report available on request

5 Dimensions

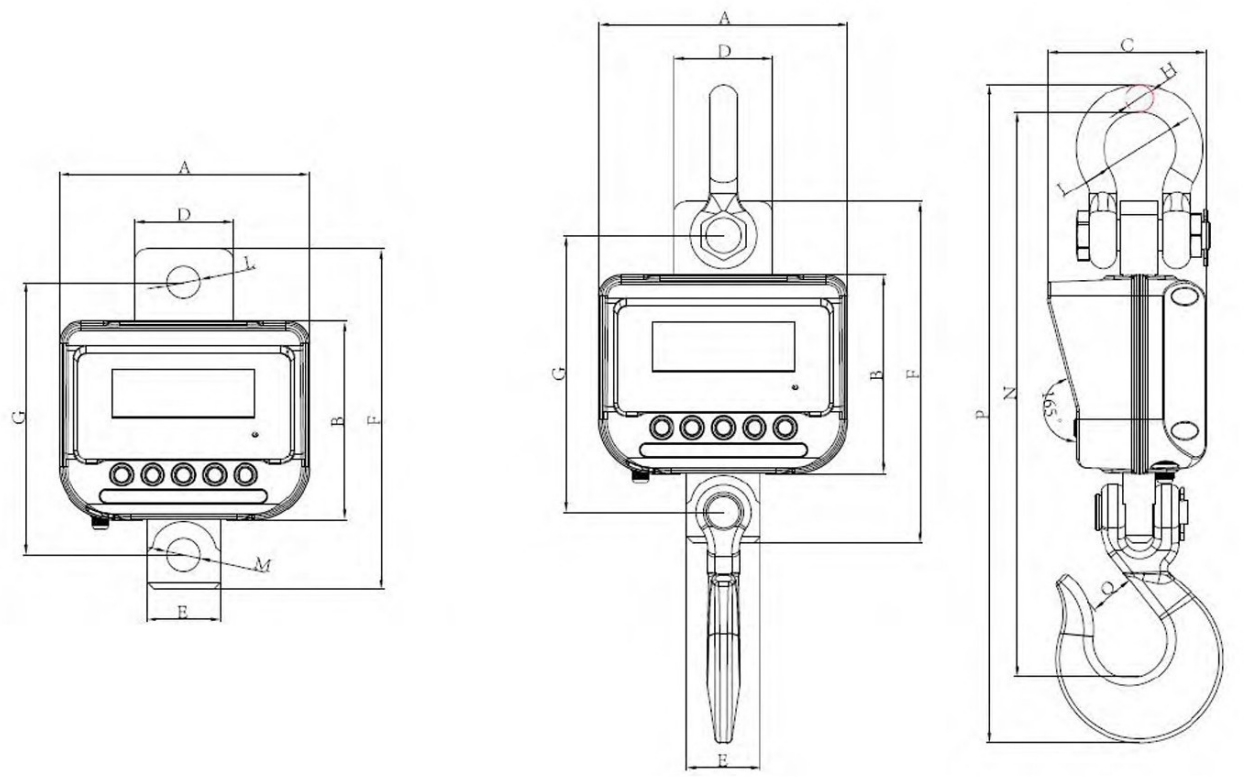

Dimensions in mm (table below).

Dimension (mm)	600 kg	1500 kg	3000 kg	6000 kg	12000 kg
A	201	201	201	201	201
B	160	160	160	160	160
C	128.5	128.5	128.5	128.5	128.5
D	80	80	80	95	95
E	60	60	60	80	80
F	270	270	275	320	330
G	219	219	219.5	248	247.5
ØH	19	19	22	25.4	31.8
ØJ	50.8	50.8	58	68.3	82.5
ØL	23	23	26.5	30	36
ØM	23	23	26.5	30	36
N	415	415	456	528	557
P	477	477	532	624	660
Q	42.9	42.9	50.8	63.5	63.5

6 Crane scale interfaces

6.1 Keys functions on crane scale



Keypad of the crane scale.

Key	Function
SLEEP	Manually activate/deactivate Sleep mode
G/N	Choice of displaying gross or net weight
TARE	Net weight function (tare application)
ZERO	Weight zero setting
ON/OFF	Turning on / turning off

6.2 Keys functions on remote control

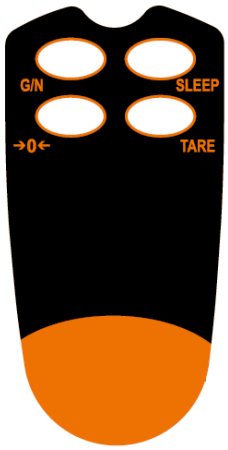

Remote control: keys 1 and 2 at the top, 3 and 4 at the bottom (from left).

Key number	Marking	Equivalent to crane scale key	Function
1	G/N	G/N	Choice of displaying gross or net weight
2	SLEEP	SLEEP	Manually activate/deactivate Sleep mode
3	→0←	ZERO	Weight zero setting
4	TARE	TARE	Net weight function (tare application)

Important Remote control with operating range up to 20 m free field.

6.3 Display

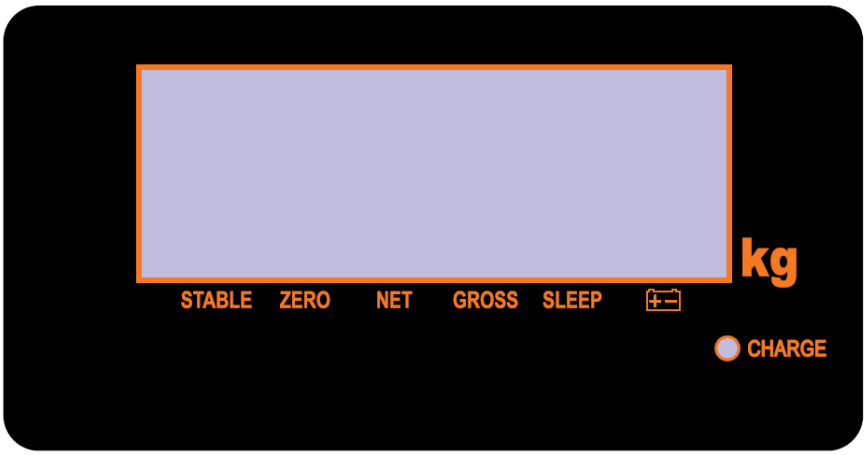

Display of the crane scale with signals and CHARGE LED.

Element	Meaning
Display	shows the weight or messages
STABLE	stable weight
ZERO	stable zero weight
NET	displays the net weight
GROSS	displays the gross weight
SLEEP	the crane scale is on Sleep mode
Battery symbol	discharged battery, recharge
CHARGE (LED)	battery charge status: green = fully charged; yellow = partially charged (it is advisable to complete charging before use); red = low charge

7 Operation

The operations described in this chapter may be carried out with the crane scale keys or with the equivalent remote control keys (section 6.2).

7.1 Turning on/turning off

To turn the instrument on or off, press the ON/OFF key on the crane scale.

7.2 Weight zero-setting

To zero a weight value, press the ZERO key. Once the weight is stabilized, the ZERO signal lights up. The zero-setting will be lost after turning off.

Note The highest value that may be set to zero is ±2 % of capacity.

7.3 Automatic zero setting at power-on

If at switch-on the weight value is lower than 10 % of the maximum capacity, the weight is reset. The zero setting will be lost after power-off.

7.4 Net weight function (tare weight application)

- Load the empty container to be used on the crane scale.
- Press the TARE key.

The crane scale displays the net weight: the display indicates zero and the NET signal turns on. Multiple consecutive tare weights may be applied if the parameter **F8 ST** is set to **ON** (chapter 9).

Important When activated, the tare function reduces the measurement range of the crane scale. For example, if the tare weight value is 1000 kg and the crane scale's capacity is 5000 kg, the system will go in overload when exceeding 4000 kg, although it could normally weigh up to 5000 kg.

Press the G/N key to go back to displaying the gross weight or press the TARE key to delete the tare entered.

7.5 Sleep mode

To activate or deactivate the Sleep mode, press the SLEEP key on the crane scale or on the remote control. When the crane scale is on Sleep mode, only the relative SLEEP signal is on.

7.6 Display in sub-divisions

Press and hold the TARE key to temporarily display one more decimal. This function is required in some tests defined by the legal metrology standards.

8 Setup menu

The operations described in this chapter may be carried out with the crane scale keys or with the equivalent remote control keys (section 6.2).

8.1 Menu access

- Turn the crane scale on by pressing the ON/OFF key.
- Press the TARE key during the start-up phase.

The display shows **P1- - -** to ask for the access password 000 (to enter the value, see section 8.3). If the password is correct, the setup menu opens; navigate it as described in section 8.2.

8.2 Navigating the menus

Key	Function in the setup menu
G/N	Exit the configuration of the current parameter
TARE	Scroll the parameters
ZERO	Confirm

8.3 Entering numeric values

Key	Function when entering values
G/N	Scroll the active digit on the display to the right
TARE	Increase the active digit
ZERO	Confirm

8.4 Access to legally relevant parameters

To access legally relevant parameters, press the calibration switch on the crane scale; then press ZERO to access the protected menu. To access the calibration switch, remove the protection screw and use a screwdriver to press it.

Important Access to legally relevant parameters is lost when returning to the weight display.



Pressing the calibration switch with a screwdriver.

Caution Access to legally relevant parameters requires breaking the seals. Therefore, this procedure should only be carried out by authorized personnel in order to maintain the legal for trade status. The operation of an instrument whose seals are not intact is to be considered NOT approved.

9 Parameters

9.1 Overview

Display	Function	Setting and values
F0 CAL	Calibration	Calibration procedure (chapter 10); protected by the calibration switch (section 8.4)
F1 CAP	Reserved	–
F2 SP	Sampling speed	Converter sampling speed setting: **Slow** (slow), **Mid** (average, default), **Fast** (quick); protected by the calibration switch (section 8.4)
F3 INP	Converter points	Converter points display
F4 GRA	Gravity	Gravitational acceleration setting in the place of operation (to enter the value, see section 8.3); protected by the calibration switch (section 8.4)
F5 COM	Reserved	–
F6 TI	Time	Time setting (to enter values, see section 8.3)
F7 DA	Date	Date setting, format yy.mm.dd (to enter values, see section 8.3)
F8 ST	Multi tare	**ON**: allows to carry out more consecutive tare operations; **OFF**: it is NOT possible to carry out more consecutive tare operations (default)
F9 OF	Automatic power off	**0**: NO automatic power off; **5**, **10**, **20**, **30**: automatic power off in 5, 10, 20 or 30 minutes
F10 OVE	Overload log	Overload log display (section 9.2)

9.2 Overload log

Under **F10 OVE** the overload events are numbered in chronological order; select the event of interest with the TARE key and press ZERO to view the date, time and overload weight in sequence.

Delete an overload event:

- Turn the crane scale on and press ZERO during the start-up phase.
- Press G/N for 2 seconds; the display will show the number of overload events.
- Select the event to be deleted with the TARE key.
- Press ZERO to delete it; the display shows **DELETE**.

Delete all overload events:

– Turn the crane scale on and press SLEEP during the start-up phase.
– Press G/N for 2 seconds; the display shows **DELETE**.

10 Calibration

Caution The parameter **F0 CAL** is protected by the calibration switch; the seals must be broken (section 8.4).

Step	Action	Display
1	Access the menu (section 8.1).	**P1- - -**
2	Access the **F0 CAL** menu (section 8.4).	**F0 CAL**
3	Zero point: the display shows **Unld**. Remove possible loads from the crane scale hook and wait for it to stabilize. Press the ZERO key to confirm the value.	**Unld**
4	Sample weight: after calibrating the zero point, the display shows the sample weight value. Enter the weight of the sample weight to be used for calibration (section 8.3) and press ZERO to confirm the value.	–
5	The display shows **Load**. Load the sample weight with the previously entered value on the crane scale hook and wait for it to stabilize. Press the ZERO key once again to confirm the value.	**Load**

11 Battery

Instructions for battery operation and maintenance:

– This crane scale uses a 7.4 V and 5200 mAh lithium ion battery.
– Battery life is approximately 60 hours. The energy saving functions may be used to preserve battery life (automatic power off **F9 OF**, chapter 9).
– The battery charge time when fully discharged is approximately 5 hours.
– Battery charging works even if the crane scale is off.
– Charge the battery with its dedicated charger 100-240 VAC. Working temperature during battery recharging: 0 ... +40 °C.
– The CHARGE LED indicates the battery charge status: green = fully charged; yellow = partially charged (it is advisable to complete charging before use); red = low charge.
– When the battery is almost fully discharged, the battery symbol is activated. After 30 minutes, the message **LO-bAt** is displayed. If the battery is not recharged, the crane scale automatically turns off.

12 Display messages

Message	Description	Possible solutions
Err 4	Zero setting error: weight at power-on higher than 10 % F.S., or an attempt to zero a weight higher than ±2 % F.S. was made.	Reduce the load.
Err 6	A/D value out of range.	Remove load from the crane scale and check the installation is correct.
Err 17	Tare out of range.	Negative weight or overload. Remove load and restart the instrument.
- - oL -	Overload.	Remove load. Repeat calibration if necessary.
FAiL	Calibration error.	Repeat calibration.
LO-bAt	Low battery.	Recharge battery.

13 Troubleshooting

Symptoms	Possible causes	Suggested solutions
The display flashes and the brightness is low.	Low battery.	Recharge the battery.
The weight reading on the display is unstable.	The crane scale is moving.	Wait until the scale is stable.
	The Anti-Motion filter value is too low.	Set the filter value higher.
	The crane scale is wet.	Dry the crane scale.
	Dust on the PCB boards.	Clean the PCB board.
The crane scale does not zero.	The load cell is deformed.	Contact the technical support.
Large error in the weight reading.	The scale was not reset to zero before applying the load.	Zero the scale before loading.
	The system must be recalibrated.	Re-calibrate the scale (chapter 10).
The battery will not charge.	Defective battery.	Replace the battery.
	Battery charger input defective.	Replace the charging plug.
The remote control only works a few meters away from the crane scale.	The remote control batteries are getting low.	Replace the remote control batteries.

14 Directives and standards

According to the declarations of conformity (EU and UKCA, 28/09/2023) for the crane scale:

Mark applied	Legislation	Standards
CE	2014/30/EU EMC Directive	EN 55032:2015
		EN 61000-3-2:2014
		EN 61000-3-3:2013
		EN 55024:2010+A1:2015
CE	2006/42/EC Machinery Directive	EN 13155:2003+A2:2009
CE M (only if the "M" mark is applied)	2014/31/EU NAWI Directive	EN 45501:2015
UKCA	Electromagnetic Compatibility Regulations 2016	BS EN 55032:2015
		BS EN 61000-3-2:2014
		BS EN 61000-3-3:2013
		BS EN 55024:2010+A1:2015
UKCA	The Supply of Machinery (Safety) Regulations 2008	BS EN 13155:2003+A2:2009

The declarations of conformity are available from octogon on request.