APPROVED DIGITAL CRANE SCALE



TENSION

- CAPACITY UP TO 12 000 kg
- SUITABLE FOR BRIDGE CRANE
- IP65 PROTECTION RATING

NOMINAL LOAD (FS)

kg	kN	DIVISION (kg)	NET WEIGHT (kg)	IP65	OIML
600	6	e = 0.2	8.5	●	●
1 500	15	e = 0.5	8.5	●	●
3 000	30	e = 1	9.9	●	●
6 000	60	e = 2	17	●	●
12 000	120	e = 5	20	●	●

office@octogon.org | +43 676 3628453
octogon GmbH | Roseggerstrasse 16 8700 Leoben | Austria

V06 | 11/2026 | © octogon GmbH

TECHNICAL DATA

DESCRIPTION AND MAIN FUNCTIONS

Description	• Approved die-cast aluminum crane scale complete with upper shackle and lower hook; suitable for bridge crane. • 6-digit backlit LCD display (30 mm height). • IP65 protection rating. • 7.4 V rechargeable internal battery, 5200 mAh capacity. • Operating time: 60 hours. • External battery charger 100-240 VAC included. • Remote control with range up to 20 m line of sight.
Main functions	• Semi-automatic tare (net/gross weight). • Weight zero setting. • Tare weight zero setting. • High resolution visualization. • Remote control functions: high resolution, zero, net weight, stand-by. • Energy saving mode.

TECHNICAL FEATURES

Working load limit without releasing the load (% of full scale)	300%
Safe overload (% of full scale)	200%
Working temperature	-10°C +40°C

COMPLIANCE AND CERTIFICATION

Protection Rating	IP65
Compliance	CE, RoHS, REACH
Calibration	Factory-calibrated, ISO 17025 calibration available on request
HS-CODE	9031.80.80
Certifications	OIML R76:2006, class III, 3000 divisions
	Conformity assessment (initial verification) Compliant to machinery directive 2006/42/EC and EN 13155:2003/A2:2009
Certifications (on request)	Calibration report

DIMENSIONS (mm)

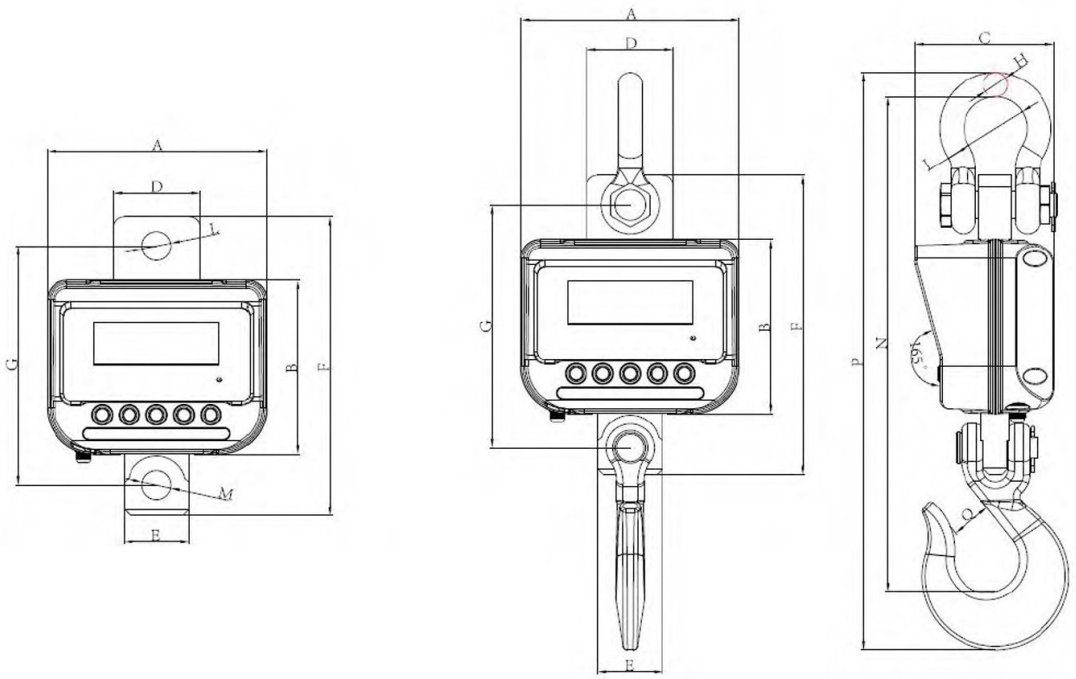

Mod.	A	B	C	D	E	F	G	ØH	ØJ	ØL	ØM	N	P	Q
L-DTA600	201	160	128.5	80	60	270	219	19	50.8	23	23	415	477	42.9
L-DTA1.5T	201	160	128.5	80	60	270	219	19	50.8	23	23	415	477	42.9
L-DTA3T	201	160	128.5	80	60	275	219.5	22	58	26.5	26.5	456	532	50.8
L-DTA6T	201	160	128.5	95	80	320	248	25.4	68.3	30	30	528	624	63.5
L-DTA12T	201	160	128.5	95	80	330	247.5	31.8	82.5	36	36	557	660	63.5