COMPRESSION LOAD CELL – FOR FOOT

COMPRESSION



- 17-4PH STAINLESS STEEL | 1.4542
- COMBINED ERROR ≤ ±0.07 %
- IP67 PROTECTION RATING
- ADJUSTABLE HEIGHT

CE · RoHS COMPLIANT · REACH COMPLIANCE · Dynamic Measurement · IP67 · Stainless Steel 17-4 PH · 1.4542 · UKCA · Ex · ISO 17025 ACCREDITED LABORATORY · ISO 376 REFERENCE STANDARD · mV/V

NOMINAL LOAD (FS)

kg	kN	NET WEIGHT (kg)	COMBINED ERROR	THREAD	UKCA	Ex	ISO 376	Rated Output (mV/V)
75	0.75	1.7	≤±0.07 %	M12 x 1.75	●	●	●	2.0 ±5%
150	1.5	1.7	≤±0.07 %	M12 x 1.75	●	●	●	2.0 ±5%
300	3	1.7	≤±0.07 %	M12 x 1.75	●	●	●	2.0 ±5%
500	5	1.7	≤±0.07 %	M12 x 1.75	●	●	●	2.0 ±5%
1 000	10	1.4	≤±0.07 %	M12 x 1.75	●	●	●	2.0 ±5%
2 000	20	1.7	≤±0.07 %	M12 x 1.75	●	●	●	2.0 ±5%
5 000	50	1.8	≤±0.07 %	M20 x 2.5	●	●	●	2.0 ±5%
10 000	100	1.7	≤±0.07 %	M24 x 3	●	●	●	2.0 ±5%

ON REQUEST

TECHNICAL DATA

PRECISION

Rated Output (C_n)	2.0 mV/V±5 % at FS
Zero Balance	±1.0 %
Combined error	≤ ±0.07 %FS
Non-linearity	≤ ±0.049 %FS
Hysteresis	≤ ±0.049 %FS
Creep	≤ ±0.02 %FS (at 30 min FS)
Temperature coefficient on zero	0.002 %FS/°C
Temperature coefficient on span	0.002 %FS/°C
Compensated temperature range	-10...+50 °C
Operating temperature range	-20...+60 °C
Reference Temperature	23 °C

MECHANICAL PROPERTIES

Material	17-4PH STAINLESS STEEL | 1.4542
Deflection at FN	~ 0.1 mm

ELECTRICAL PROPERTIES

Bridge configuration	Full Wheatstone bridge, 6-wire
Input resistance	350 ± 20 Ω
Output resistance	350 ± 5 Ω
Insulation resistance	≥ 5 000 MΩ at 100 V
Recommended excitation voltage	5 - 20 V
Cable diameter	5.0 mm
Cable length	5 m: 75 – 5 000 kg 10 m: 10 000 kg

ELECTRICAL CONNECTION

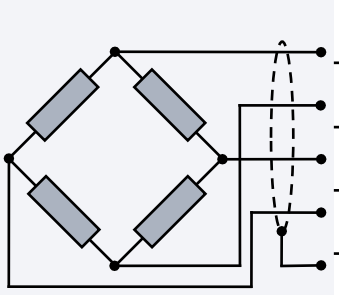

+ EXCITATION	Red
+ REF./SENSE	Blue
– EXCITATION	Black
– REF./SENSE	YELLOW
+ SIGNAL	Green
– SIGNAL	White
SHIELD	

MECHANICAL LIMITS

Service load	120 %FS	Load without any permanent deformation or change in calibration.
Safe overload	150 %FS	The highest static load that may be applied once or briefly without mechanical damage.
Breaking load	> 200 %FS	Load at which permanent deformation or mechanical failure (fracture) occurs.
Max. transverse load (side)	50 %FS	Maximum lateral or shear load that can be applied (e.g. due to misalignment or friction).
Max. permissible dynamic load	70 %FS	For cyclic or oscillating loads, the amplitude should not exceed this load to prevent fatigue failure.

DIMENSIONS (mm)

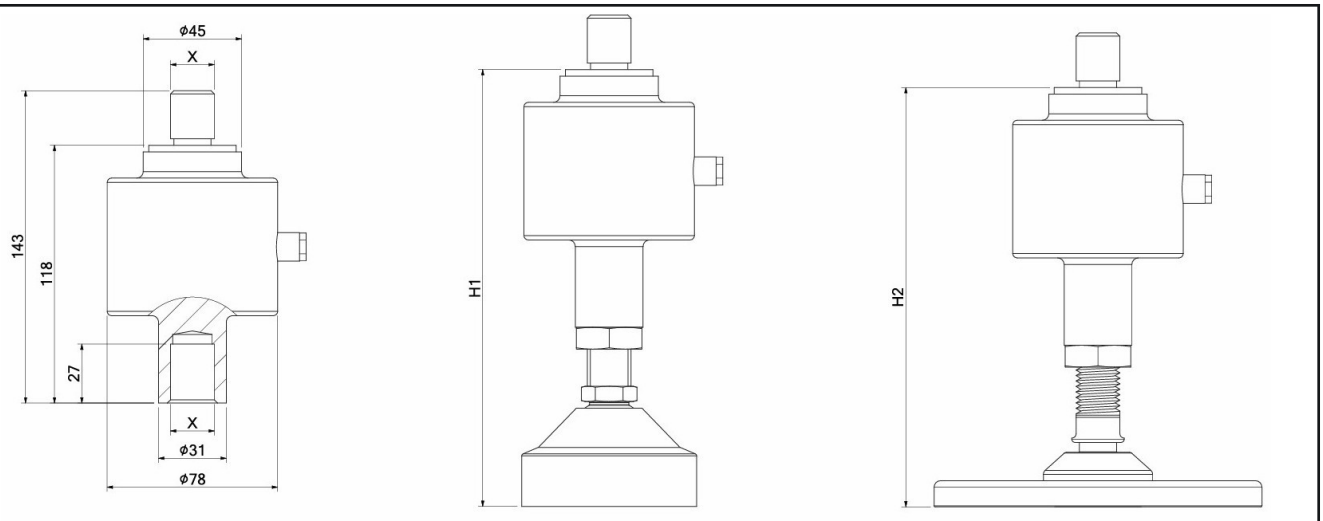

CAPAZITY	X	H1 (LFLB +LALAH)	H2 (LFLB +LALAL)	INSTALLATION NOTES:
75 kg	M12 x 1.75	190 ÷ 200 mm	180 ÷ 192 mm	▪ screw the foot all the way in; ▪ slightly unscrew the foot to adjust (maximum excursion: 10 mm); ▪ tighten the fixing nut.
150 kg	M12 x 1.75			
300 kg	M12 x 1.75			
500 kg	M12 x 1.75			
1 000 kg	M12 x 1.75			
2 000 kg	M12 x 1.75			
5 000 kg	M20 x 2.5			
10 000 kg	M24 x 3	–		

COMPLIANCE AND CERTIFICATION

Protection Rating	IP67	
Compliance	CE, RoHS, REACH	
Calibration	Factory-calibrated, ISO 17025 calibration available on request	
HS-CODE	9031.80.80	
Certifications	UKCA	Equivalent of the CE marking for the United Kingdom
Certifications on request	✓	calibration report
	ISO 376	LAT Accredia calibration certificate ISo 376 or ASTM E74 for capacities from 1000 kg to 10000 kg
	Ex	ATEX (zone 2-22)

EXAMPLE OF INSTALLATION

WITH LALAL AND LALAH SERIES FEET



COMPLEMENTARY ACCESSORIES

	AISI 304 stainless steel plate for constraints against lateral forces and anti-tilt.	M12	LALAD
	Only for LALAH series feet	M20	LALAF