HYGIENIC COMPRESSION LOAD CELL

COMPRESSION



- 17-4PH STAINLESS STEEL | 1.4542
- COMBINED ERROR ≤ ±0.1 %
- IP69K PROTECTION RATING
- CABLE SUITABLE FOR CONTACT WITH FOOD
- ADJUSTABLE HEIGHT
- HYGIENIC DEVICE RPSCQC AUTHORIZED BY 3-A SSI.

Dynamic Measurement

Stainless Steel 17-4 PH · 1.4542

NOMINAL LOAD (FS)

kg	kN	NET WEIGHT (kg)	COMBINED ERROR	THREAD	UKCA	A3	Rated Output (mV/V)
1 000	10	1.6	≤±0.1 %	M12	●	●	2.0 ±0.1%
2 000	20	1.52	≤±0.1 %	M12	●	●	2.0 ±0.1%
5 000	50	1.7	≤±0.1 %	M16	●	●	2.0 ±0.1%
5 000	50	1.7	≤±0.1 %	M20	●	●	2.0 ±0.1%
10 000	100	1.7	≤±0.1 %	M24	●	●	2.0 ±0.1%
10 000	100	2.21	≤±0.1 %	M30	●	●	2.0 ±0.1%
20 000	200	2.5	≤±0.1 %	M36	●	●	2.0 ±0.1%

office@octogon.org | +43 676 3628453
octogon GmbH | Roseggerstrasse 16 8700 Leoben | Austria

V06 | 11/2026 | © octogon GmbH

TECHNICAL DATA

PRECISION

Rated Output (C_n)	2.0 mV/V±0.1 % at FS
Zero Balance	< ±1.0 %
Combined error	≤ ±0.1 %FS
Non-linearity	≤ ±0.071 %FS
Hysteresis	≤ ±0.071 %FS
Creep	≤ ±0.05 %FS (at 30 min FS)
Temperature coefficient on zero	0.005 %FS/°C
Temperature coefficient on span	0.005 %FS/°C
Compensated temperature range	-10...+50 °C
Operating temperature range	-20...+70 °C
Reference Temperature	23 °C

MECHANICAL PROPERTIES

Material	17-4PH STAINLESS STEEL | 1.4542
Deflection at FN	~ 0.5 mm

ELECTRICAL PROPERTIES

Bridge configuration	Full Wheatstone bridge, 6-wire
Input resistance	350 ± 20 Ω
Output resistance	350 ± 5 Ω
Insulation resistance	≥ 5 000 MΩ at 100 V
Recommended excitation voltage	5 - 15 V
Cable diameter	5.0 mm
Cable length	5 m: 1 000 kg, 2 000 kg, 5 000 kg, 10 000 kg (M24) 10 m: 10 000 kg (M30), 20 000 kg

ELECTRICAL CONNECTION

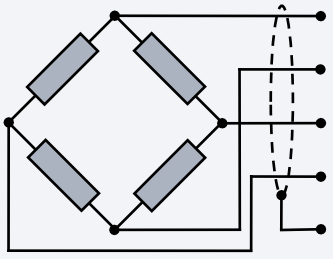

+ EXCITATION	Red
+ REF./SENSE	Blue
– EXCITATION	Black
– REF./SENSE	Brown
+ SIGNAL	Green
– SIGNAL	White
SHIELD	

MECHANICAL LIMITS

Service load	120 %FS	Load without any permanent deformation or change in calibration.
Safe overload	150 %FS	The highest static load that may be applied once or briefly without mechanical damage.
Breaking load	> 300 %FS	Load at which permanent deformation or mechanical failure (fracture) occurs.
Max. transverse load (side)	50 %FS	Maximum lateral or shear load that can be applied (e.g. due to misalignment or friction).
Max. permissible dynamic load	70 %FS	For cyclic or oscillating loads, the amplitude should not exceed this load to prevent fatigue failure.

DIMENSIONS (mm)

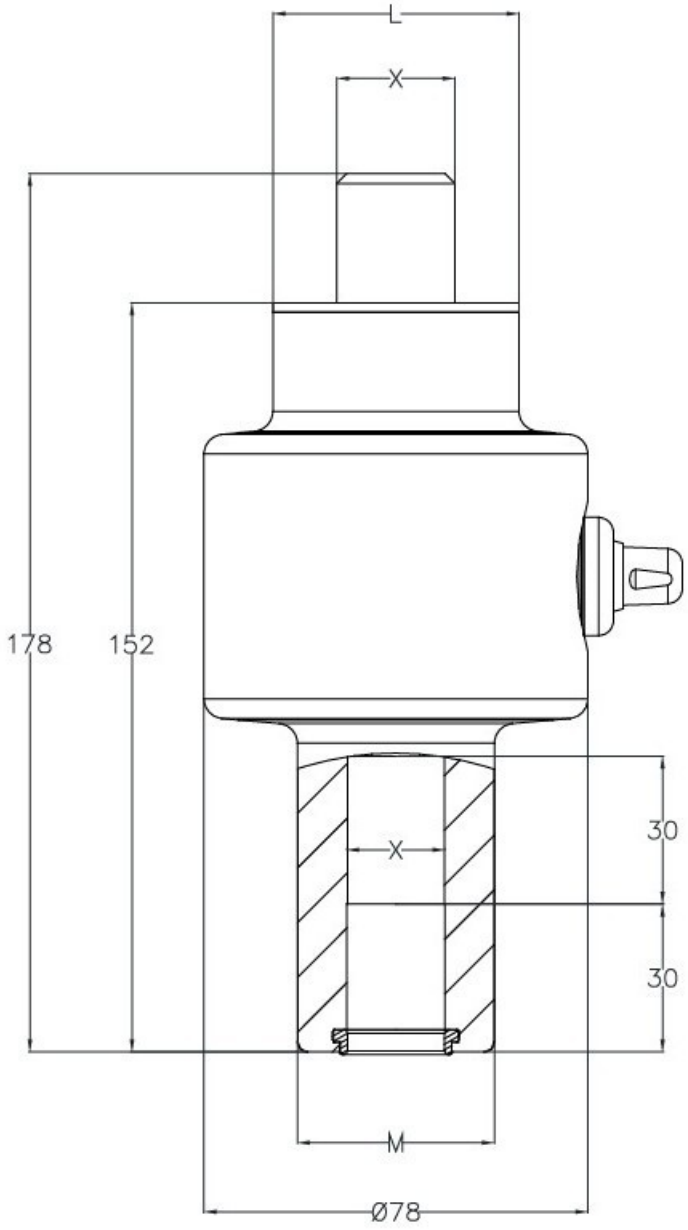

	X	L	M
L-FLC1000M12A3A	M12	24	40
L-FLC2000M12A3A	M12	24	40
L-FLC5000M16A3A	M16	30	40
L-FLC5000M20A3A	M20	35	40
L-FLC10000M24A3A	M24	50	40
L-FLC10000M30A3A	M30	50	50
L-FLC20000M36A3A	M36	50	50

COMPLIANCE AND CERTIFICATION

Protection Rating	IP69K	
Compliance	CE, RoHS, REACH	
Calibration	Factory-calibrated, ISO 17025 calibration available on request	
HS-CODE	9031.80.80	
Certifications	UKCA	Equivalent of the CE marking for the United Kingdom
	3A	American standard that regulates the design, production and use of hygienic equipment
Certifications (on request)		Calibration report
	ISO 376	LAT Accredia calibration certificate ISO 376 or ASTM E74 for capacities from 1000 kg to 10000 kg
	Ex	ATEX (zone 2-22)
	Ex IECEx	ATEX/IECEx (zone 1-21)

COMPLEMENTARY ACCESSORIES

	CODE	FOR LOAD CELLS
Hygienic foot	L-FLC273793A	L-FLC1000M12A3A
	L-FLC273793A	L-FLC2000M12A3A
	L-FLC273803A	L-FLC5000M16A3A
	L-FLC273843A	L-FLC5000M20A3A
	L-FLCD120M24503A	L-FLC10000M24A3A
	L-FLCD120M30503A	L-FLC10000M30A3A
	L-FLCD120M36503A	L-FLC20000M36A3A

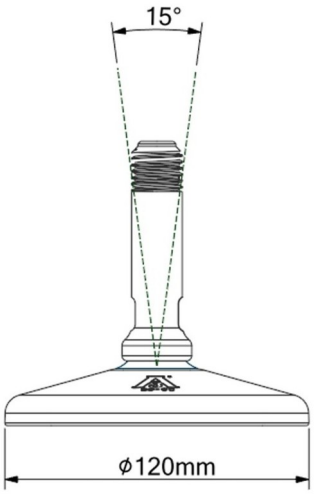

ANGULAR ADJUSTMENT


EXAMPLE OF INSTALLATION ON HYGIENIC FOOT

On request: hygienic foot with dowel fastening

LOAD CELL KIT+FOOT

CODE	FOR LOAD CELLS	HYGIENIC FOOT
L-FLC1000M123A	L-FLC1000M12A3A	L-FLC273793A
L-FLC2000M123A	L-FLC2000M12A3A	L-FLC273793A
L-FLC5000M163A	L-FLC5000M16A3A	L-FLC273803A
L-FLC5000M203A	L-FLC5000M20A3A	L-FLC273843A
L-FLC10000M243A	L-FLC10000M24A3A	L-FLCD120M24503A
L-FLC10000M303A	L-FLC10000M30A3A	L-FLCD120M30503A
L-FLC20000M363A	L-FLC20000M36A3A	L-FLCD120M36503A

