OCTOGON

MANUAL

LELD

SINGLE CELL PLATFORM WITH STAINLESS STEEL LOADING PLATE

Mounting and installation manual



Document	Version	Date	Applies to
Mounting and installation manual	V00x	11/2026	LELD, all nominal loads

octogon GmbH · Roseggerstrasse 16 · 8700 Leoben · Austria · office@octogon.org

Contents

1 About this manual 2
1.1 Notes in this manual 2
2 Warnings 2
3 Device 3
3.1 Parts identification 3
3.2 Technical data 3
3.3 Nominal loads 4
3.4 Dimensions (mm) 4
4 Installation 4
5 Earthing 5
6 Electrical connection 5
6.1 Wiring according to the datasheet 5
7 Calibration 5
8 Maintenance 5
8.1 Replacing the load cell 6
9 Guidelines for proper disposal 6

1 About this manual

This manual describes installation, earthing, electrical connection, calibration and maintenance of the LELD weighing platform. Manufacturer type: L-MN.

The LELD is a single load cell platform (datasheet: number of load cells 1). The load cell is connected directly to the weighing instrument, without the aid of a junction box.

The device data in chapter 3 and the wiring in chapter 6 are taken from the LELD datasheet (LELD Datasheet V01 EN). Further characteristics, compliance, certifications and options are given there.

1.1 Notes in this manual

Marking	Meaning
Important	Pay particular attention to the following instructions.
Note	Further information.

2 Warnings

– The platforms must not be exposed to sources of heat with a higher temperature than the operating temperature of their components (please refer to the technical documentation of the items in use).

– Position the material on the loading plate without dragging it in order to reduce the risk of producing sparks.

– Do not use in places with a risk of high radio frequency levels, electromagnetic waves, optical and ionizing radiation, ultrasounds, adiabatic compression, exothermic reactions, lightning.

– Do not install in places with a risk of explosion (except for specific versions for which the specific documentation needs to be requested).

3 Device

3.1 Parts identification

The connection between the load cell and the weighing instrument is direct, without the aid of a junction box. The load cell is reached by lifting the loading plate.

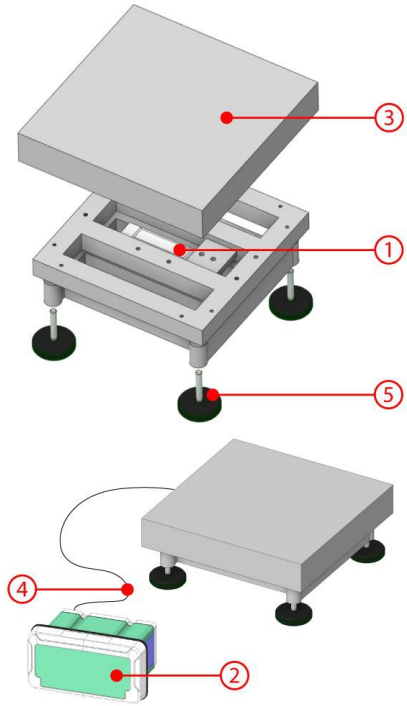

Single load cell platform (example illustration)

No.	Part
1	Load cell
2	Weighing instrument
3	Loading plate
4	Load cell cable
5	Height-adjustable feet

3.2 Technical data

Precision	Value
Accuracy class	C3 (OIML R60)
On request	C4 (OIML R60)

Mechanical properties	Value
Structure	Painted steel tubular structure
Loading plate	AISI 304 stainless steel
Feet	Galvanized steel and polyamide, M10
Indicator-holder column	Connection provided

Load cell	Value
Number	1
Material	Aluminum alloy
Protection rating	IP65
Type	LCLD, see dimensions

3.3 Nominal loads

Nominal load (kg)	Platform (mm)	Weight (kg)
75	460 × 600	23
150	460 × 600	23
300	460 × 600	23

All capacities OIML R60 C3.

3.4 Dimensions (mm)

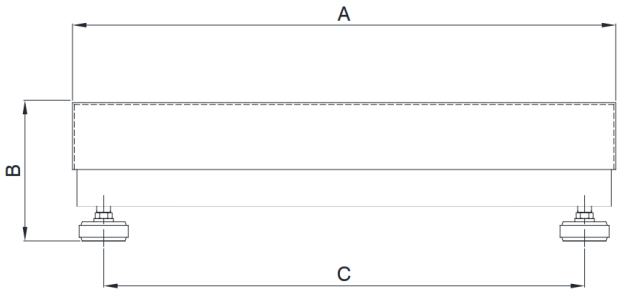

Side view



Front view (feet M10)

Capacity	75 kg	150 kg	300 kg
Load cell	LCLD 100 kg	LCLD 200 kg	LCLD 500 kg
A	460 × 600	460 × 600	460 × 600
B	150	150	150
C	397 × 542	397 × 542	397 × 542
D	64	64	64
E	1.5	1.5	1.5
F	60	60	60
Gross weight (kg)	23	23	23

4 Installation

Position the platform where the following conditions can be observed:

- flat and level bearing surface
- stability with no vibration
- no aggressive vapors or powders
- moderate temperature and humidity (please refer to the technical documentation of the items in use)

Installation procedure:

- remove the blocks or the safety screws for transportation from the platform (when present)
- adjust the height by screwing/unscrewing the feet and level the platform with the aid of a bubble level
- secure the position of each foot with the tightening nut on the screw (when present)

At the end of the procedure all the feet have to stand evenly and ensure the platform is perfectly flat.

Important The leveling process is important in order to ensure the stability and functionality of the platform. Before transporting the platform, insert the blocks or the safety screws (when present).

5 Earthing

If the platform has to be earthed, connect an earth cable to the frame by means of the eyelet (when present). The eyelet can be in one of the positions shown:



Left: by one of the safety screws for transportation – centre: near the handle – right: close to a load cell

Earthing is essential in order to avoid electrostatic discharge, especially when working in critical places such as, for example, where there are plastic residues or powder.

Important On some platforms the loading plate is isolated from the frame: always check for electrical continuity between them and if necessary earth the platform's loading plate as well.

Note The earthing eyelet is supplied only with some platform models.

6 Electrical connection

Connect the load cell cable to the weighing instrument; the number and colors of the cable's wires may vary (please refer to the technical documentation of the items in use).

6.1 Wiring according to the datasheet

Connection	Wire colour
+ EXCITATION / + REF./SENSE	Red / Blue
– EXCITATION / – REF./SENSE	Black / Yellow
+ SIGNAL	Green
– SIGNAL	White
SHIELD	

REF./SENSE where provided.

7 Calibration

- If the nameplate data of the load cell are not known, calibrate with sample weights.
- If the nameplate data of the load cell are known, perform theoretical calibration. Check the theoretical calibration: if it is not correct, then correct the indicated weight by calibrating with sample weights.

Note For more information about the calibration procedures, please refer to the documentation of the weighing instrument in use.

8 Maintenance

- Clean the loading plate regularly with a damp cloth to avoid the accumulation of dust.
- Regularly check the earthing of the platform.

– Using a sample weight, regularly check the weighing system works properly.

8.1 Replacing the load cell

In order to replace the load cell you need to locate the load cell (see section 3.1 Parts identification).

Procedure for replacing the load cell:

1. disconnect the load cell cable from the weighing instrument;
2. remove the screws supporting the load cell;
3. remove the load cell and replace it with one of the same model and capacity (load cell per platform size: see section 3.4);
4. connect the new load cell to the weighing instrument.

On completing replacement you need to repeat:

1. installation (see chapter 4);
2. calibration (see chapter 7).

9 Guidelines for proper disposal

The crossed-out wheeled bin symbol on the product or packaging indicates that:

– This is electrical/electronic equipment and cannot be disposed of as municipal solid waste, but must be delivered to a recycling center.

– Improper use or disposal can pollute the environment or damage human health.

– Non-compliance with these guidelines will be penalized in accordance with the regulations in force in the country of destination.

– It is recommended to dispose of the packing and packaging as required by local regulations.