OCTOGON

MANUAL

LCLB

SINGLE-POINT LOAD CELL FOR PLATFORMS

Mounting and installation manual



Document	Version	Date	Applies to
Mounting and installation manual	V00x	11/2026	LCLB, all nominal loads

This English version is a translation of the German version (LCLB Manual V00x DE) by octogon. The German version is authoritative; markings and approval details apply in the wording of the respective certificate.

octogon GmbH · Roseggerstrasse 16 · 8700 Leoben · Austria · office@octogon.org

Contents

1 About this manual 2
2 Device 3
2.1 Characteristics for mounting and connection 3
2.2 Nominal loads 3
2.3 Mechanical limits 3
2.4 Dimensions (mm) and tightening torques 4
3 Mounting 4
3.1 Recommendations for correct installation of the load cells 4
3.2 Loading 5
3.3 Mounting kits and accessories 6
4 Electrical connection 6
4.1 Wiring 6
4.2 Electronic instrumentation 6
5 Checking the load cells 6
5.1 Resistance measurement with a digital multimeter 6
5.2 Voltage measurement with a digital multimeter 7

1 About this manual

This manual describes mounting, installation, electrical connection and testing of the LCLB load cell (single-point load cell for platforms). Manufacturer type: L-ALL.

The device data in chapters 2 to 4 are taken from the LCLB datasheet (LCLB Datasheet V06 EN). Further characteristics, compliance, certifications and ordering options are given there.

Important Read the recommendations for correct installation (chapters 3 and 4) completely before mounting. Failure to observe the installation recommendations is classified as improper use of the device.

2 Device

2.1 Characteristics for mounting and connection

Characteristic	Value
Protection rating	IP65 according to IEC 60529
Rated Output (Cn)	2 mV/V ±10 % at FS
Zero Balance	≤ ±2 %
Compensated temperature range	-10...+40 °C
Operating temperature range	-35...+65 °C
Reference Temperature	23 °C
Material	Aluminum alloy
Deflection at FN	0.5 mm
Bridge configuration	Full Wheatstone bridge, 4-wire
Input resistance	409 Ω ±6
Output resistance	350 Ω ±3
Insulation resistance	≥ 5 000 MΩ at 100 V
Minimum verification interval (Vmin)	Emax/10 000 [C3]
	Emax/15 000 [C4]
	Emax/20 000 [C5]
Recommended excitation voltage	≤ 18 V
Cable diameter	3.8 mm
Cable length	3 m
Cores	4 x 0.20 mm2

2.2 Nominal loads

Nominal load (kg)	N	Net weight (kg)	Platform A x B (mm)	Accuracy class	Rated output (mV/V)
3	30	0.2	250 x 350	C3, C4, C5	2 ±10%
5	50	0.2	250 x 350	C3, C4, C5	2 ±10%
10	100	0.2	250 x 350	C3, C4, C5	2 ±10%
15	150	0.2	250 x 350	C3, C4, C5	2 ±10%
20	200	0.2	250 x 350	C3, C4, C5	2 ±10%
30	300	0.2	250 x 350	C3, C4, C5	2 ±10%
50	500	0.2	250 x 350	C3, C4, C5	2 ±10%

2.3 Mechanical limits

Limit	Value	Meaning
Service load	120 %FS	Load without any permanent deformation or change in calibration.
Safe overload	150 %FS	The highest static load that may be applied once or briefly without mechanical damage.
Breaking load	>300 %FS	Load at which permanent deformation or mechanical failure (fracture) occurs.
Max. transverse load (side)	50 %FS	Maximum lateral or shear load that can be applied (e.g. due to misalignment or friction).
Max. permissible dynamic load	70 %FS	For cyclic or oscillating loads, the amplitude should not exceed this load to prevent fatigue failure. The dynamic load must be applied to the transducer central thread.

2.4 Dimensions (mm) and tightening torques

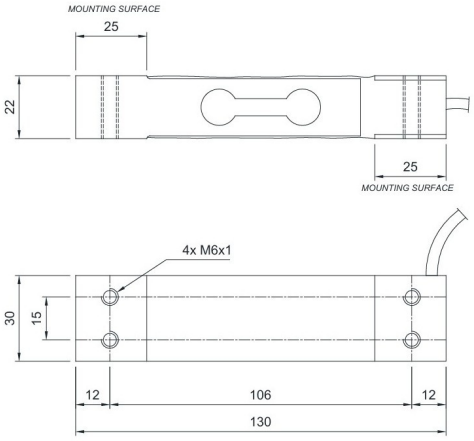

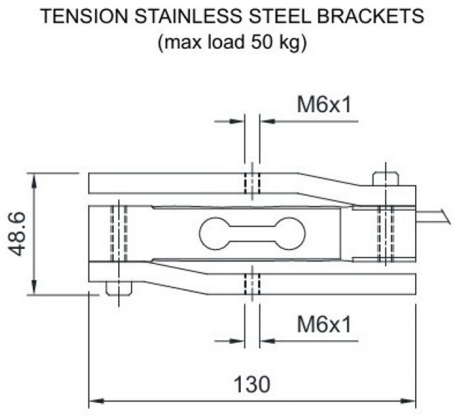

For the load cell fixing screws, provide the tightening torque indicated in the table

Screw	M6	M6
Screw class	6.8	8.8
Tightening torque	7.5 Nm	10 Nm

3 Mounting

3.1 Recommendations for correct installation of the load cells

Sizing the nominal load of the load cells

For safety reasons it is recommended to use the load cells under dead load at a maximum of 70–80 % of their nominal load (assuming that the load is evenly distributed over the entire weighed system). Depending on how the load to be weighed is moved, consider whether the percentage of the load in relation to the nominal load should be reduced further (e.g. when moved by forklift, bridge crane etc.).

Under live load, the installer is responsible for calculating thrust, acceleration, frequency etc.

Mounting the load cells

The support surfaces of the load cells must be coplanar and sufficiently rigid. Suitable mounting kits must be used to compensate for deviations in parallelism of the support surfaces.

Connecting several cells in parallel

To connect several cells in parallel, a sealed junction box with terminal board must be used where necessary. The extension cables of the cells must be shielded, run individually in cable ducts or conduits and be laid as far away as possible from the power cables (for a cable with 4 conductors, use a minimum cross-section of 1 mm^2).

Protection of the cell cable

Use sealed cable sheaths and connections to protect the cell cables.

Mechanical connections (pipes etc.)

Where pipes are present, use hoses and flexible couplings or open-inlet couplings with rubber protection. In the case of rigid pipework, place the pipe support or anchoring bracket as far away as possible from the weighed structure (at least 40 times the pipe diameter).

Welding

It is recommended not to carry out any welding with the load cells already mounted. If this is unavoidable, position the earth clamp of the welding machine close to the planned welding point to prevent current from flowing through the body of the load cell.

Presence of wind – shocks – vibrations

Suitable mounting kits are available for all load cells. They serve to compensate for deviations in parallelism of the support surfaces. The system designer must take further measures against lateral displacement and the risk of tipping with regard to the following aspects: shocks and vibrations; wind pressure; seismic classification of the installation area; consistency of the support surface.

Earthing of the weighed structure

Connect the upper support plate of each cell to the corresponding lower plate of the same cell with a copper conductor of suitable cross-section, then connect all lower plates to the same earthing system. The electrostatic charge that builds up from the product rubbing against the hoses and the walls of the weighed vessel is discharged to earth without passing through the load cells and damaging them. Without a correct earthing system the operation of the weighing system is not impaired, but future damage to the cells and the instrument connected to them cannot be ruled out. The continuity of the earthing system must not be established via metal parts of the weighed structure.

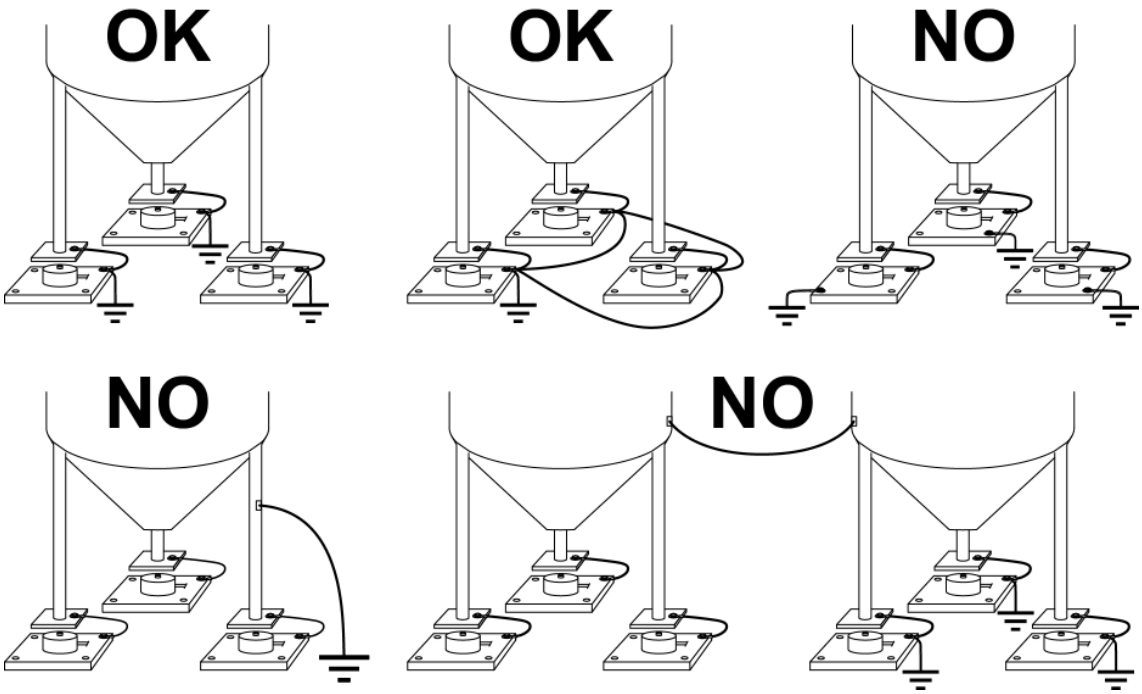

Earthing of the weighed structure: OK = correct design, NO = incorrect design

Important Failure to observe the installation recommendations is classified as improper use of the device.

3.2 Loading

Comply with the loading area

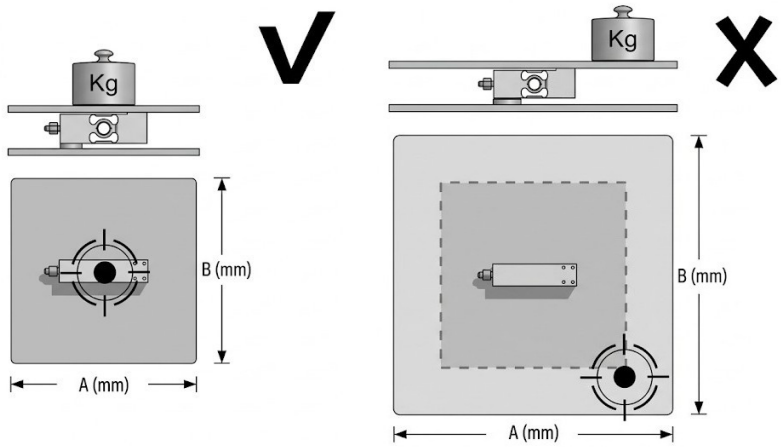

A (mm)	B (mm)	A (mm)	B (mm)
≤ 350	≤ 250	> 350	> 250

3.3 Mounting kits and accessories

According to the datasheet, the following mounting kits and accessories are available for this load cell:

Code	Design	Nominal load
LALAW	– Pair of stainless steel tension brackets	Max. static load: 50 kg

4 Electrical connection

4.1 Wiring

Bridge configuration: Full Wheatstone bridge, 4-wire.

Connection	Wire colour
+ EXCITATION	RED
– EXCITATION	BLACK
+ SIGNAL	GREEN
– SIGNAL	WHITE
SHIELD	

Cable	Value
Cable diameter	3.8 mm
Cable length	3 m
Cores	4 x 0.20 mm2

4.2 Electronic instrumentation

– The entry of the cell cable into the control panel must be separate, and the cable must not be laid together with other cables in one cable duct. As a rule, it is connected directly to the terminal board of the instrument without intermediate auxiliary terminal boards.

– The instrument should not be installed in a control panel with inverters. If this is unavoidable, the inverters must be fitted with suitable filters and separating metal sheets must be used.

– If instruments have to be supplied with 230 volt alternating current, a 380/230 volt transformer must be used. Avoid using one of the phases of the 380 V mains and the neutral conductor.

– The electrical protective devices for the instruments (fuses, door interlock switches etc.) are the responsibility of the control panel installer.

– If signs of condensation appear inside the devices, it is recommended not to disconnect the devices from the power supply.

5 Checking the load cells

5.1 Resistance measurement with a digital multimeter

– Disconnect the cells from the instrument and check whether the junction box shows traces of moisture caused by condensation or water ingress. In this case the system must be repaired or, if necessary, replaced.

– Check that the value measured between the + signal conductor and the – signal conductor is similar to the value given in the load cell datasheet (output resistance).

– Check that the value measured between the + excitation conductor and the – excitation conductor is similar to the value given in the cell datasheet (input resistance).

– Check that there is an insulation value of more than 20 MΩ between the shield and any other conductor of the cell, and between any other conductor of the cell and the cell body.

Reference values from the LCLB datasheet:

Characteristic	Value according to datasheet
Input resistance	409 Ω ±6
Output resistance	350 Ω ±3
Insulation resistance	≥ 5 000 MΩ at 100 V

5.2 Voltage measurement with a digital multimeter

– Remove the cell to be checked from under the vessel or lift the vessel support.

– Check that a voltage of 5 VDC ±3 % is present on the excitation wires of the cell connected to the instrument (or to the extension).

– Measure the response signal of the cell between the + signal conductor and the – signal conductor by connecting them directly to the meter. Check that the measured value is between 0 and ±0.5 mV.

– Apply a force to the cell and check that the signal increases.

Note If any of the above conditions is not met, please contact technical customer service.