ACCESSORY WITH BALL

COMPRESSION

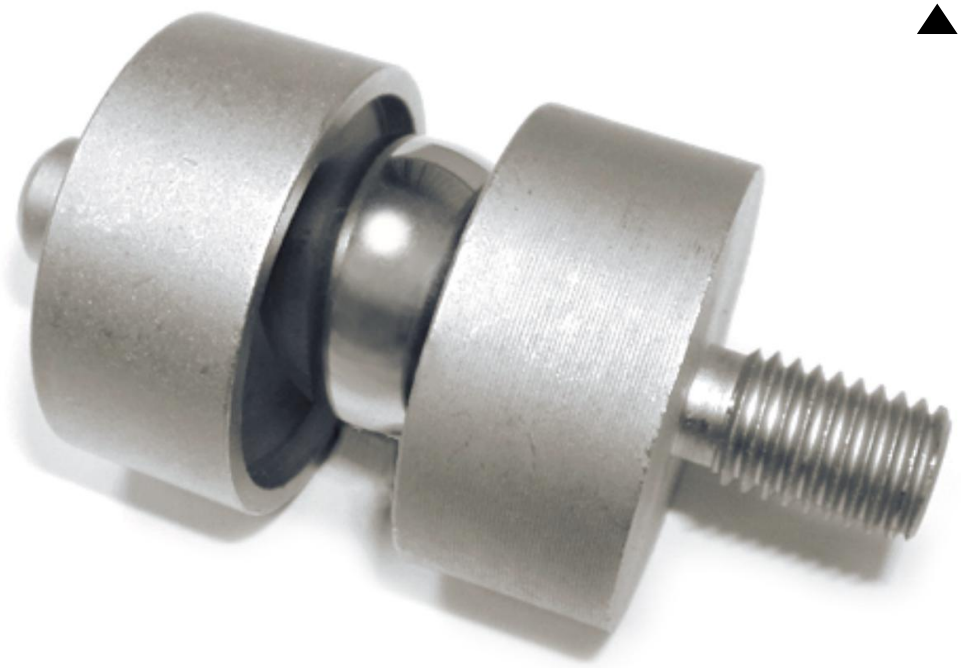

- UP TO 5 000 KG APPLICATION RANGE
- AISI 420 - 1.4034 STAINLESS STEEL ACCESSORY WITH BALL
- COMPENSATES FOR MISALIGNMENT OF THE SUPPORT PLATES

Stainless Steel
AISI 420 · 1.4034

MAX STATIC LOAD

kg	For load cells	Dimensions	Net weight (kg)
2 000	LBLA - LBLF - LBLJ - LBLK - LBLL - LKLE	M12x1.75	0.3
5 000	LBLA (3 000-5 000 kg) - LBLF - LBLJ - LBLL (5 000 kg) - LKLE (5 000 kg)	M20x2.5	0.4

office@octogon.org | +43 676 3628453

octogon GmbH | Roseggerstrasse 16 8700 Leoben | Austria

V01 | 10/2026 | © octogon GmbH

DESCRIPTION AND APPLICATION

DESCRIPTION

Stainless steel accessory with ball to compensate for misalignment of the support plates.



EXAMPLE OF APPLICATION

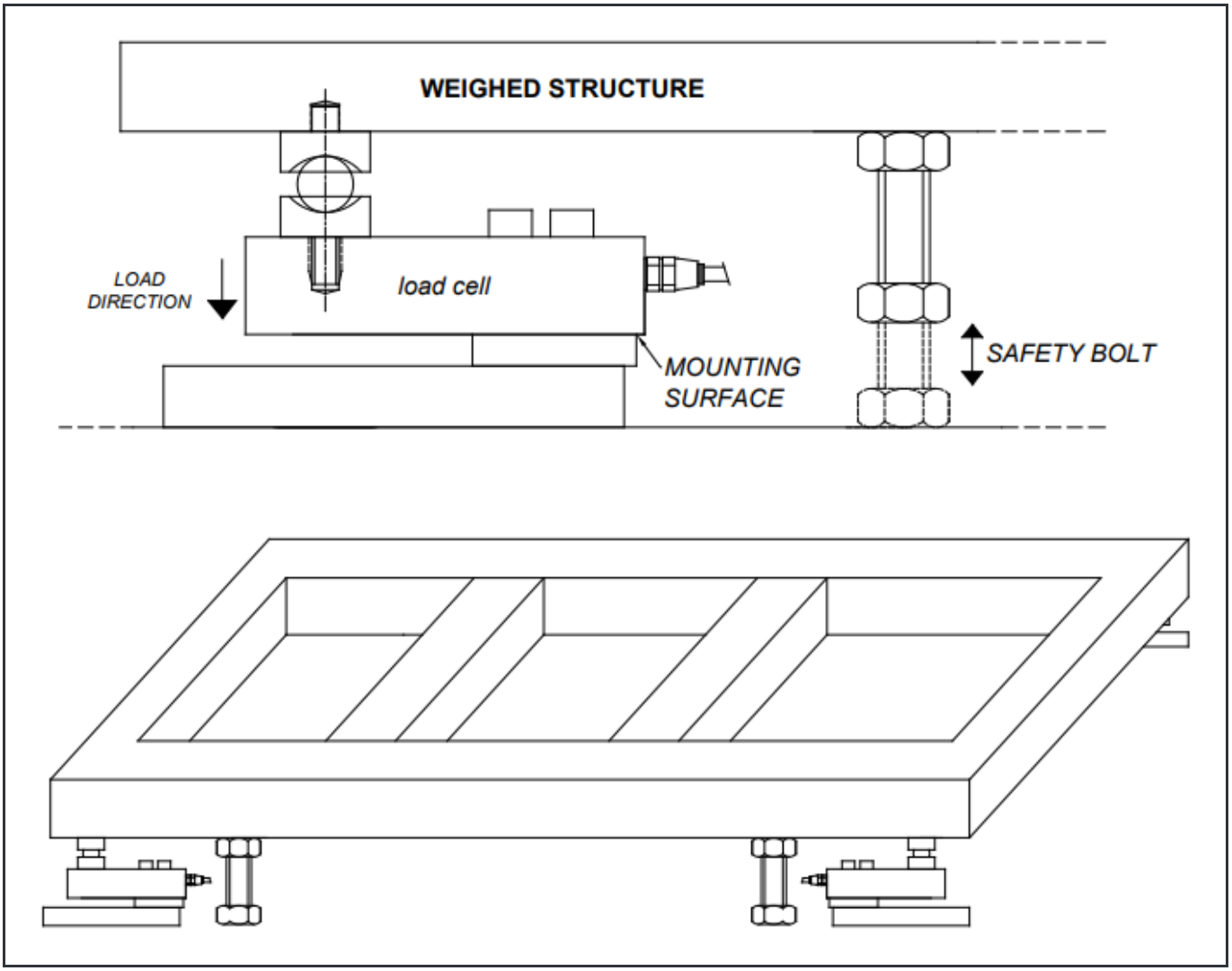

DIMENSIONS (mm)

Max static load: **2 000 kg**

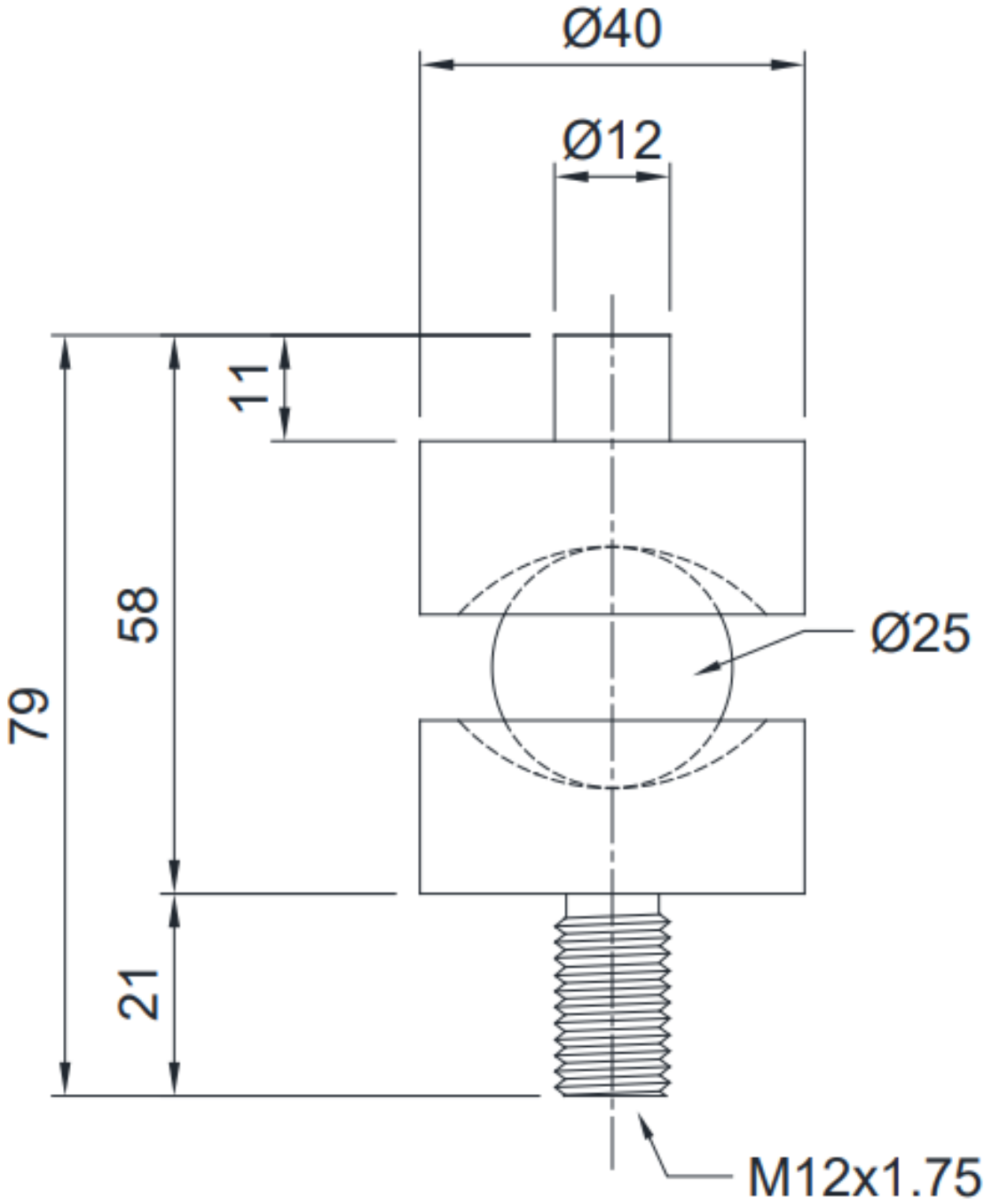

office@octogon.org | +43 676 3628453
octogon GmbH | Roseggerstrasse 16 8700 Leoben | Austria

V01 | 10/2026 | © octogon GmbH

DIMENSIONS (mm)

Max static load: ***5 000 kg***

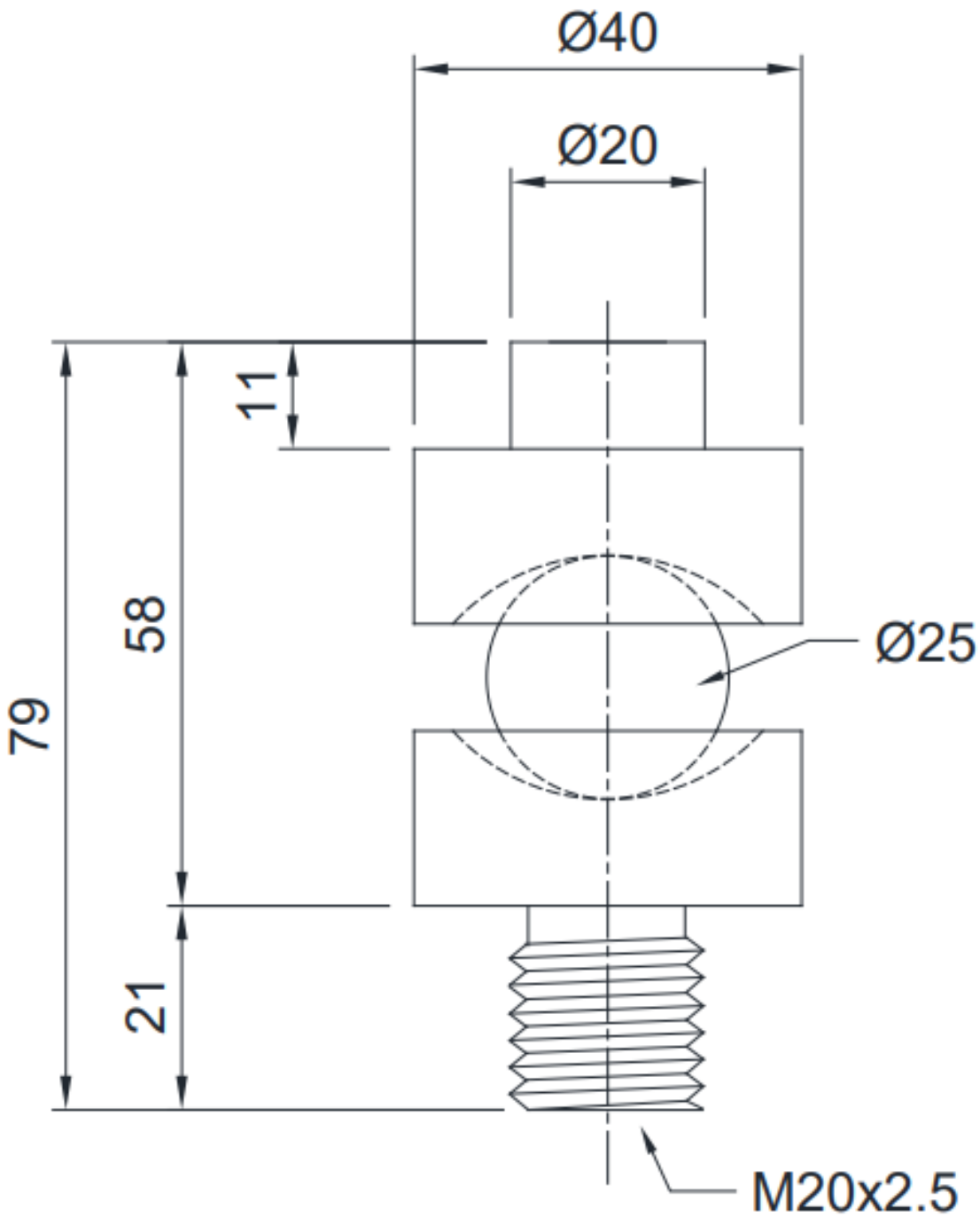

office@octogon.org | +43 676 3628453
octogon GmbH | Roseggerstrasse 16 8700 Leoben | Austria

V01 | 10/2026 | © octogon GmbH