AXIAL SPHERICAL PLAIN BEARINGS

COMPRESSION



- HARDENED 100Cr6 STEEL BEARING
- FOR LBLA, LBLE, LBLF, LBLJ, LBLK AND LBLL LOAD CELLS

MAX STATIC LOAD

kg	Description	For load cells	Net weight (kg)
2 000	Axial spherical plain bearing	LBLA - LKLE - LBLF - LBLJ - LBLK - LBLL	0.07

office@octogon.org | +43 676 3628453
octogon GmbH | Roseggerstrasse 16 8700 Leoben | Austria

V01 | 10/2026 | © octogon GmbH
www.octogon.org

DESCRIPTION AND APPLICATION

DESCRIPTION

Hardened 100Cr6 steel bearing to compensate for misalignment of the support plates.

EXAMPLE OF APPLICATION

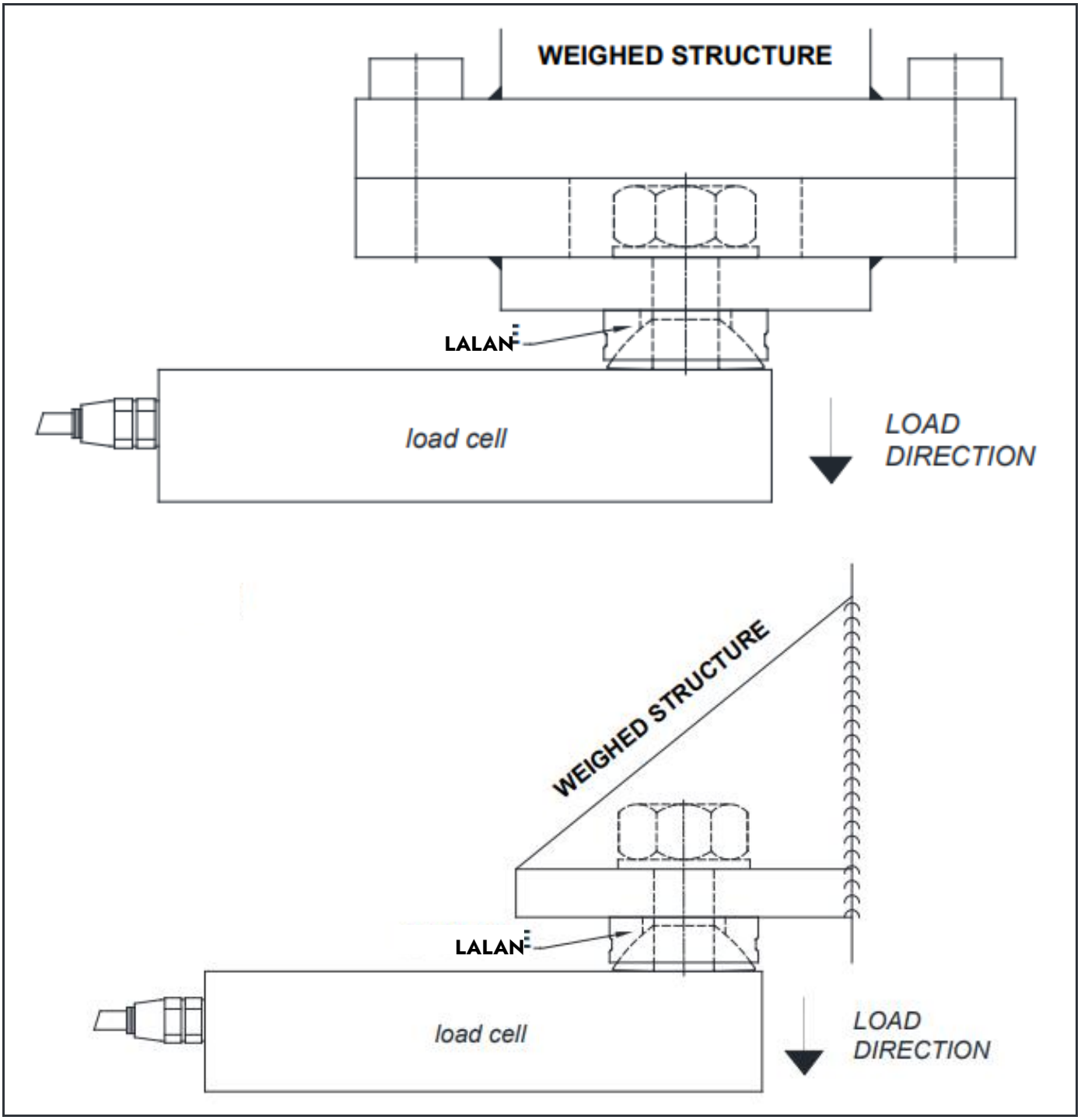

DIMENSIONS (mm)

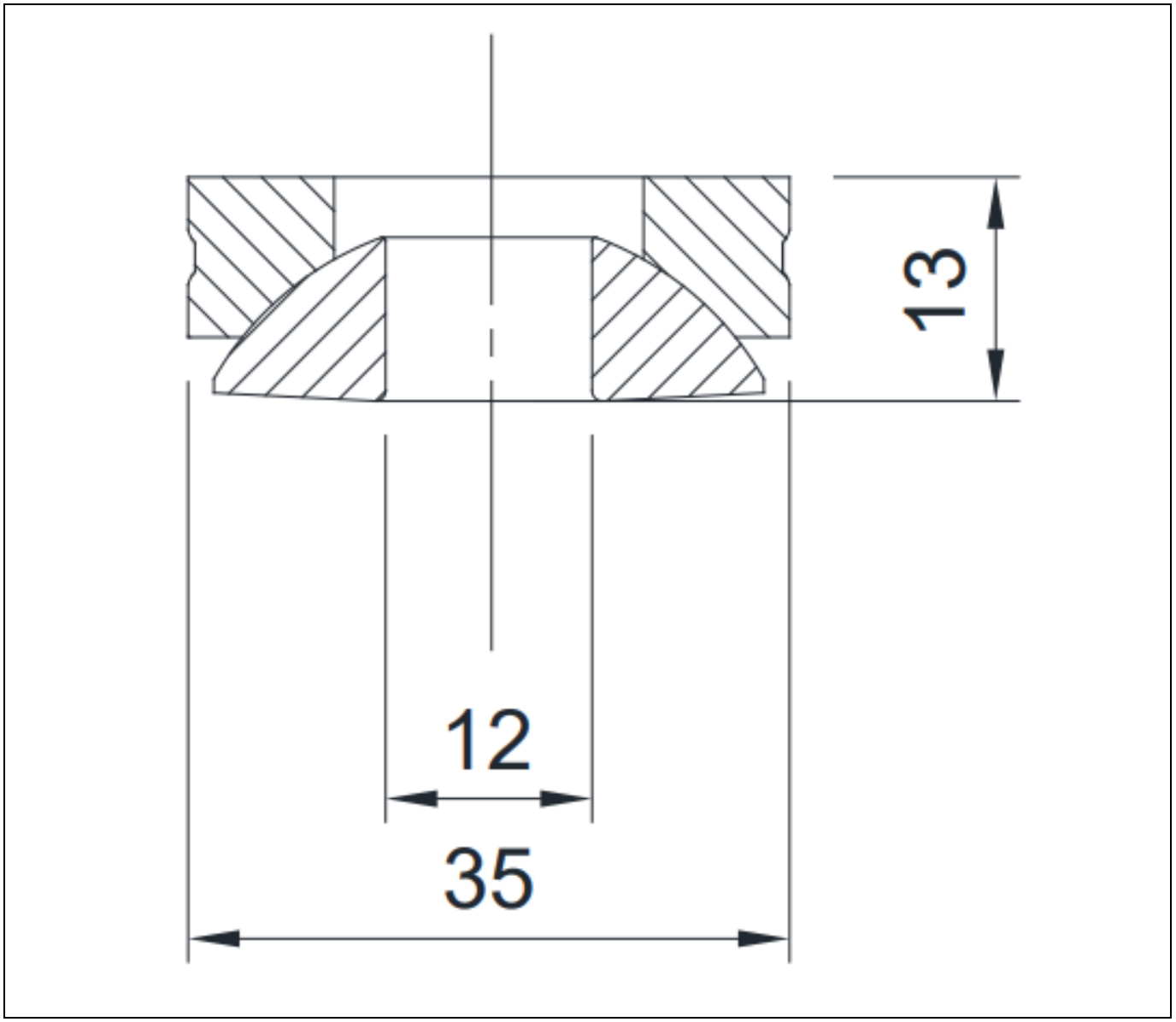

office@octogon.org | +43 676 3628453
octogon GmbH | Roseggerstrasse 16 8700 Leoben | Austria

V01 | 10/2026 | © octogon GmbH
www.octogon.org