SELF-CENTERING JOINT FEET

TENSION & COMPRESSION



- FOR BENDING BEAM AND SHEAR BEAM LOAD CELLS
- STAINLESS STEEL OR GALVANIZED STEEL

Stainless Steel

Galvanized Steel

MAX STATIC LOAD

kg	Thread	Dimensions	Material	Net weight (kg)
2 000	M12	Ø60 x H 78 mm	stainless steel	0.4
2 000	M12	Ø60 x H 78 mm	galvanized steel	0.4

Nuts and washers included.

DESCRIPTION AND APPLICATION

DESCRIPTION

- Self-centering joint feet for BENDING BEAM and SHEAR BEAM load cells.
- Nuts and washers included.



APPLICATION

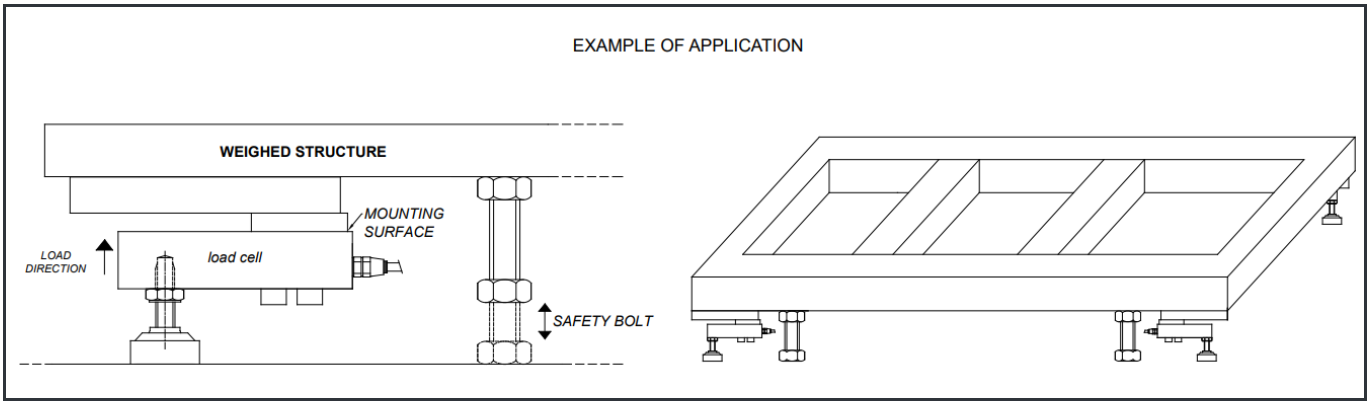

DIMENSIONS (mm)

