ADJUSTABLE UPPER PLATE

TENSION & COMPRESSION





- PLATES FOR CONSTRAINT AGAINST LATERAL FORCES AND ANTI-TILT
- FOR SELF-CENTERING JOINT FOOT
- FOR SINGLE-POINT, BENDING BEAM, SHEAR BEAM AND COMPRESSION LOAD CELLS

Galvanized Steel

MAX STATIC LOAD

kg	Material	Net weight (kg)
5 000	galvanized steel	641

office@octogon.org | +43 676 3628453
octogon GmbH | Roseggerstrasse 16 8700 Leoben | Austria

V01 | 10/2026 | © octogon GmbH

DIMENSIONS (mm)

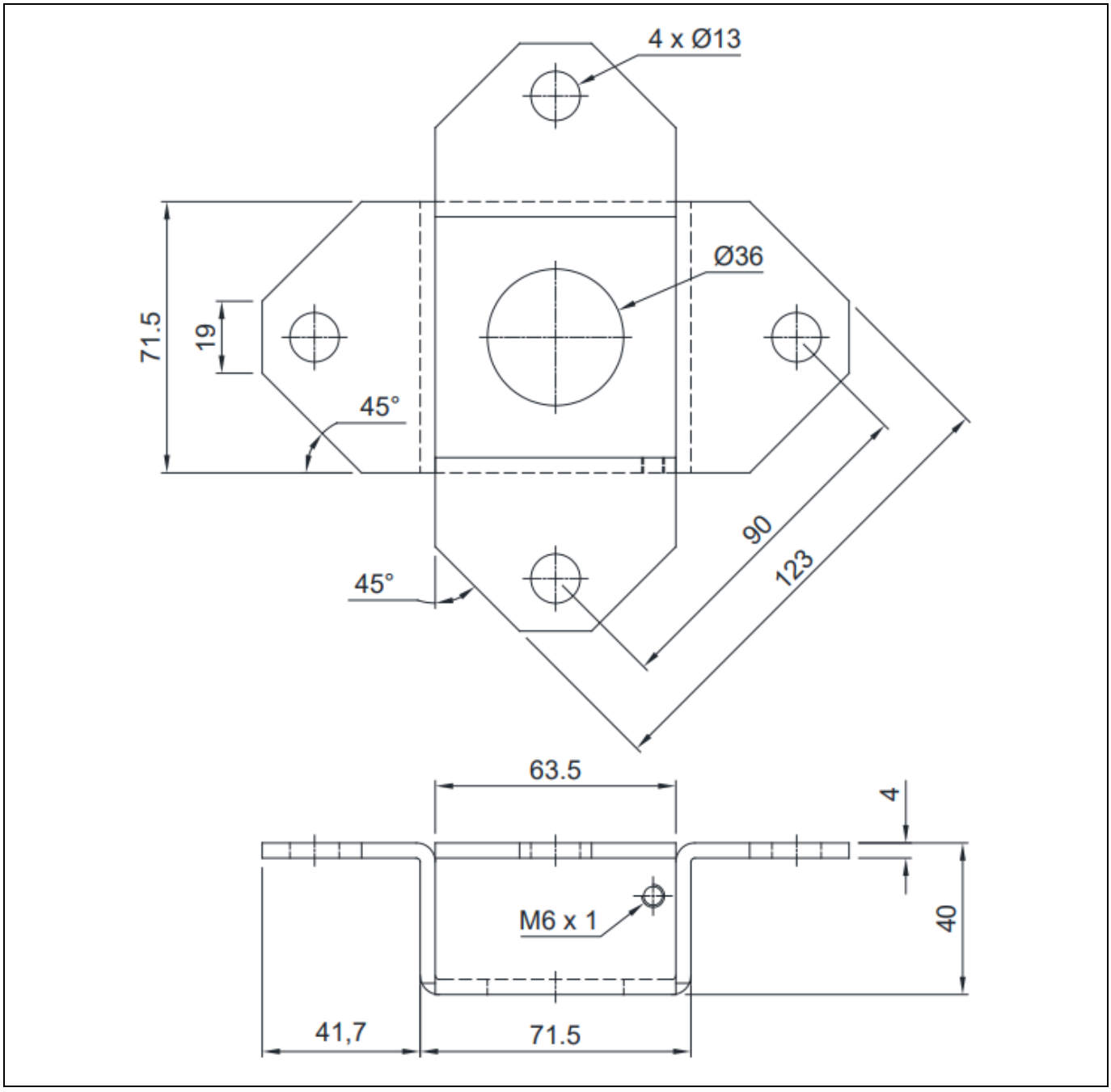

office@octogon.org | +43 676 3628453
octogon GmbH | Roseggerstrasse 16 8700 Leoben | Austria

V01 | 10/2026 | © octogon GmbH