OCTOGON

MANUAL

EMDB

RUGGED 6-CHANNEL STRAIN GAUGE AMPLIFIER

Installation and user manual

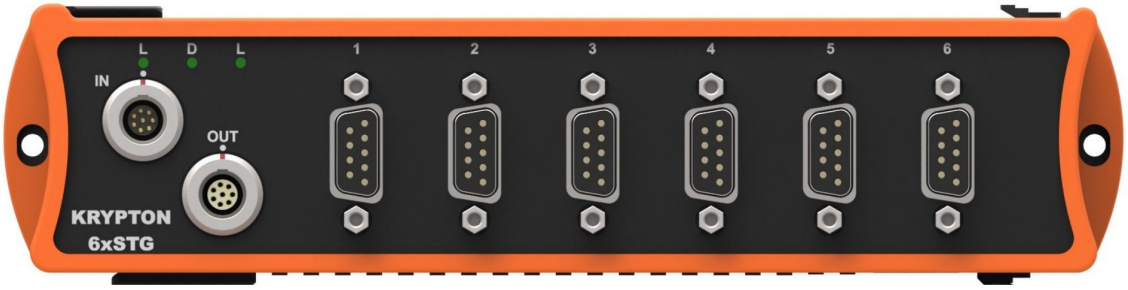

Document	Version	Date	Applies to
Installation and user manual	V00x	11/2026	EMDB, 6 channels, DSUB-9 inputs

This manual describes safety, mounting, sensor connection, EtherCAT connection and power supply, commissioning, operation and maintenance of the EMDB rugged 6-channel strain gauge amplifier with DSUB-9 input connectors.

Contents

1 About this manual ... 2
1.1 Product covered ... 2
1.2 Symbols ... 3
2 Safety instructions ... 3
2.1 General safety instructions ... 3
2.2 General safety and hazard warnings ... 3
3 Product description ... 5
3.1 Overview ... 5
3.2 Front panel ... 5
3.3 Sensors and signals ... 5
3.4 Technical specifications ... 5
3.5 Accessories ... 6
4 Mounting ... 8
4.1 Dimensions ... 8
4.2 Place of installation ... 8
4.3 Stacking modules ... 8
5 Sensor connection ... 9
5.1 Pin assignment of the input connector ... 9
5.2 Voltage ... 9
5.3 Bridge ... 9
5.4 Current ... 10
5.5 Potentiometer ... 10
5.6 DSI adapters and TEDS ... 10
6 EtherCAT connection and power supply ... 11
6.1 EtherCAT connectors IN and OUT ... 11
6.2 Connecting the module to a PC ... 11
6.3 System limits ... 11
6.4 Power supply and power injector ... 11
6.5 More than one EtherCAT chain ... 12
7 Commissioning and operation ... 13
7.1 Software and PC ... 13
7.2 First measurement ... 13
7.3 Status LEDs ... 13
7.4 Firmware upgrade ... 13
7.5 Licensing ... 14
7.6 Troubleshooting ... 14
8 Maintenance, calibration and disposal ... 15
8.1 Calibration ... 15
8.2 Maintenance and repair ... 15
8.3 Environment and disposal ... 15
9 Directives and standards ... 15
10 Glossary ... 16

1 About this manual

This manual applies to the EMDB, a rugged data acquisition module with six universal strain gauge and voltage inputs on DSUB-9 female connectors. Read the safety instructions in chapter 2 before installing or operating the module.

1.1 Product covered

	EMDB
Inputs	6 universal channels: voltage, full, half and quarter bridge
Input connectors	6 × DSUB-9 female, one per channel
Data interface	EtherCAT, LEMO 1T 8-pin IN and OUT connectors
Type marking on the device	KRYPTON-6xSTG

Versions with LEMO input connectors (10-pin or 7-pin) are available on request; their pin assignment differs and is not covered by this manual.

1.2 Symbols

Notice	Meaning
Warning	Calls attention to a procedure, practice, or condition that could cause bodily injury or death.
Caution	Calls attention to a procedure, practice, or condition that could possibly cause damage to equipment or permanent loss of data.
Important	Gives you important information about a subject. Please read carefully.
Hint	Gives you a hint or provides additional information about a subject.

2 Safety instructions

Your safety is our primary concern! Please be safe!

Caution Be careful not to connect the power supply on both ends of the EtherCAT chain. This connection will permanently damage the devices.

2.1 General safety instructions

Warning The following general safety precautions must be observed during all phases of operation, service, and repair of this product. Failure to comply with these precautions or with specific warnings elsewhere in this manual violates safety standards of design, manufacture, and intended use of the product. No liability is assumed for the customer's failure to comply with these requirements.

All accessories shown in this document are available as an option and will not be shipped as standard parts.

2.2 General safety and hazard warnings

- Safety of the operator and the unit depend on following these rules.
- Use this system under the terms of the specifications only to avoid any possible danger.
- Read your manual before operating the system.
- Observe local laws when using the instrument.
- DO NOT touch internal wiring!
- DO NOT use higher supply voltage than specified!
- Use only original plugs and cables for harnessing.
- You may not connect higher voltages than rated to any connectors.
- The power cable and connector serve as power breaker. The cable must not exceed 3 meters, the disconnect function must be possible without tools.
- Maintenance must be executed by qualified staff only.
- During the use of the system, it might be possible to access other parts of a more comprehensive system. Please read and follow the safety instructions provided in the manuals of all other components regarding warning and security advice for using the system.
- With this product, only use the power cable delivered or defined for the host country.
- DO NOT connect or disconnect sensors, probes or test leads, as these parts are connected to a voltage supply unit.
- Ground the equipment: for Safety Class 1 equipment (equipment having a protective earth terminal), a non-interruptible safety earth ground must be provided from the mains power source to the product input wiring terminals.
- Please note the characteristics and indicators on the system to avoid fire or electric shocks. Before connecting the system, please read the corresponding specifications in the product manual carefully.
- The inputs must not, unless otherwise noted (CATx identification), be connected to the main circuit of category II, III and IV.
- The power cord separates the system from the power supply. Do not block the power cord, since it has to be accessible for the users.
- DO NOT use the system if equipment covers or shields are removed.

– If you assume the system is damaged, get it examined by authorized personnel only.

– Adverse environmental conditions are moisture or high humidity, dust, flammable gases, fumes or dissolver, thunderstorm or thunderstorm conditions (except assembly PNA), electrostatic fields, etc.

– The measurement category can be adjusted depending on module configuration.

– Any other use than described above may damage your system and is attended with dangers like short-circuiting, fire or electric shocks.

– The whole system must not be changed, rebuilt or opened.

– DO NOT operate damaged equipment: whenever it is possible that the safety protection features built into this product have been impaired, either through physical damage, excessive moisture, or any other reason, REMOVE POWER and do not use the product until the safe operation can be verified by service-trained personnel. If necessary, return the product to octogon for service and repair to ensure that safety features are maintained.

– DO NOT service or adjust alone. Do not attempt internal service or adjustment unless another person, capable of rendering first aid and resuscitation, is present.

– If you assume a more riskless use is not provided anymore, the system has to be rendered inoperative and should be protected against inadvertent operation. It is assumed that a more riskless operation is not possible anymore if the system is damaged obviously or causes strange noises. The system does not work anymore. The system has been exposed to long storage in adverse environments. The system has been exposed to heavy shipment strain.

– DO NOT touch any exposed connectors or components if they are live wired. The use of metal bare wires is not allowed.

– There is a risk of short circuit and fire hazard!

– Warranty void if damages caused by disregarding this manual. For consequential damages, NO liability will be assumed!

– Warranty void if damages to property or persons caused by improper use or disregarding the safety instructions.

– Unauthorized changing or rebuilding the system is prohibited due to safety and permission reasons (CE).

– Be careful with voltages > 25 V AC or > 35 V DC! These voltages are already high enough in order to get a perilous electric shock by touching the wiring.

– The product heats during operation. Make sure there is adequate ventilation. Ventilation slots must not be covered!

– Only fuses of the specified type and nominal current may be used. The use of patched fuses is prohibited.

– Prevent using metal bare wires! Risk of short circuit and fire hazard!

– DO NOT use the system before, during or shortly after a thunderstorm (risk of lightning and high energy over-voltage). An advanced range of application under certain conditions is allowed with therefore designed products only. For details please refer to the specifications.

– Make sure that your hands, shoes, clothes, the floor, the system or measuring leads, integrated circuits and so on, are dry.

– DO NOT use the system in rooms with flammable gases, fumes or dust or in adverse environmental conditions.

– Avoid operation in the immediate vicinity of high magnetic or electromagnetic fields, transmitting antennas or high-frequency generators, for exact values please refer to enclosed specifications.

– Use measurement leads or measurement accessories aligned with the specification of the system only. Fire hazard in case of overload!

– Do not switch on the system after transporting it from a cold into a warm room and vice versa. The thereby created condensation may damage your system. Acclimatise the system unpowered to room temperature.

– Do not disassemble the system! There is a high risk of getting a perilous electric shock. Capacitors still might be charged, even if the system has been removed from the power supply.

– The electrical installations and equipment in industrial facilities must be observed by the security regulations and insurance institutions.

– The use of the measuring system in schools and other training facilities must be observed by skilled personnel.

– The measuring systems are not designed for use by humans and animals.

– Please contact a professional if you have doubts about the method of operation, safety or the connection of the system.

– Please be careful with the product. Shocks, hits and dropping it from already lower level may damage your system.

– Please also consider the detailed technical reference manual as well as the security advice of the connected systems.

This product has left the factory in safety-related flawlessness and in proper condition. In order to maintain this condition and guarantee safe use, the user has to consider the security advice and warnings in this manual.

Environmental considerations and end-of-life handling: see section 8.3.

3 Product description

3.1 Overview

The EMDB is a rugged, distributed EtherCAT data acquisition module for field measurement in extreme and harsh environments. It brings the data acquisition close to the sensors: short sensor cables reduce the cost of cabling and the chance of wiring errors and improve the signal quality.

- Six universal differential voltage and full / half / quarter bridge inputs, compatible with DSI adapters.
- Sampling rate up to 20 kS/s per channel, all channels simultaneous.
- EtherCAT with 100 Mbit/s bus speed for data transmission, data synchronisation and power supply - one cable for data, power and sync.
- Up to 100 m between units; many modules can be daisy-chained in one measurement chain.
- No IP set-up required: connected to a PC, the modules are recognised and set up by the software automatically.
- Machined from aluminium, sealed with thermally conductive and electrically insulative rubber: IP67, shock up to 100 g, operating temperature –40 °C to +85 °C.
- All data synchronised; the synchronisation runs through the same cable as power and data.
- Can be used with any third-party real-time EtherCAT master for real-time data acquisition and control applications.
- Data acquisition software included, licence embedded in the device (section 7.5).

3.2 Front panel

Element	Function
IN	EtherCAT input, LEMO 1T 8-pin male: from the PC or from the previous module (section 6.1)
OUT	EtherCAT output, LEMO 1T 8-pin female: to the next module, or connection of the power supply (section 6.4)
LEDs L - D - L	three green status LEDs: Link of the IN connector, Data, Link of the OUT connector (section 7.3)
1 … 6	input channels, DSUB-9 female (chapter 5)

3.3 Sensors and signals

Signal	Connection
Voltage	directly: ±10 V, ±1 V, ±100 mV, ±10 mV, DC coupling
Strain: full, half, quarter bridge	directly: full, half and quarter bridge (3-wire), internal completion 120 Ω and 350 Ω; excitation 0 … 15 V, freely programmable, 45 mA limit; internal shunt 100 kΩ
Potentiometer	directly
Current	with an external shunt or a DSI adapter
IEPE · charge	with the DSI-ACC and DSI-CHG adapters
Thermocouple · RTD	with the DSI-TH and DSI-RTD adapters
LVDT	with the DSI-LVDT adapter
TEDS	read automatically · standard and through DSI adapters

3.4 Technical specifications

Item	Value
Analog input	
Input type	voltage · full, half and quarter bridge strain
Number of channels	6
ADC type	24-bit oversampled SAR with 41 kHz anti-aliasing filter
Sampling rate	simultaneous 20k, 10k, 5k, 2k, 1k, 500, 200, 100 S/s, software-selectable
Voltage ranges	±10 V · ±1 V · ±100 mV · ±10 mV
Input accuracy	±0.03 % of reading · ±0.02 % of range · ±0.1 mV
Input coupling · impedance	DC · 10 MΩ
Overvoltage protection	In+ to In–: 50 V continuous, 200 V peak (10 ms)
Signal and precision	
Gain drift	typ. 10 ppm/K, max 40 ppm/K
Offset drift	typ. 0.3 µV/K + 5 ppm/K

Gain linearity	< 0.02 %
Bandwidth (–3 dB)	0.49 fs
Alias-free bandwidth	DC to 0.453 fs
Alias rejection	–100 dB, all sample rates
Oversampling	32
Delay through ADC	37 / fs
Performance per voltage range	
Voltage range	±10 V · ±1 V · ±100 mV · ±10 mV
Typ. dynamic range at 10 kS/s	–139 · –139 · –129 · –110 dB
Typ. noise floor at 10 kS/s	–106 · –105 · –97 · –78 dB
Typ. CMR at 400 Hz / 1 kHz	86/84 · 96/95 · 112/102 · 112/102 dB
Bridge and excitation	
Bridge connection	full · half · quarter bridge (3-wire)
Bridge ranges	2 … 1000 mV/V, freely programmable
Internal completion	half and quarter bridge, 120 Ω and 350 Ω
Completion accuracy	0.05 % · TCR 2 ppm/K (others on request)
Internal shunt	100 kΩ (others on request) · 0.1 % · TCR 10 ppm/K
Excitation voltage	freely programmable, 16-bit DAC · preset 0, 1, 2.5, 5, 10, 15 V DC
Excitation accuracy · drift	±0.05 % ±2 mV · ±50 ppm/K ±100 µV/K
Load stability 10 … 90 %	< 0.01 %
Current limit · protection	45 mA, 400 mW max · continuous short to ground
Input short, offset adjust	software-selectable
Interface and power	
Interface	EtherCAT · 100 Mbit/s full duplex
Connection	LEMO 1T hybrid cable: data, power and sync in one cable, daisy-chainable
Max. cable length	100 m between units
Max. units per chain	64 or more (power injectors may be required)
Throughput per chain	6 … 10 MB/s, depending on the configuration
Sync accuracy	below one sample
Power supply	9 … 48 V DC
Power consumption	5.9 W (8.9 W with 120 Ω bridges at 5 V excitation)
Environment and mechanics	
Operating temperature	–40 °C … +85 °C
Storage temperature	–40 °C … +85 °C
Humidity	5 … 100 % RH
Shock	100 g, 6 ms half-sine to SIST EN 60068-2-27:2009 · 100 × pos./neg. per axis, 600 × total
Vibration	random to MIL-STD-202G method 214A, condition II-D · 13.9 g RMS, 41.7 g peak · 8 h per axis, 24 h total
Housing	aluminium, machined from solid, sealed
Protection class	IP67
Weight	1100 g
Dimensions	213 × 54 × 56 mm · 213 × 54 × 58.2 mm with connectors
Input connector	6 × DSUB-9 female, one per channel

3.5 Accessories

Accessory	Description
DSI-ACC	IEPE and ICP sensors · 4 mA / 21 V, high-pass 0.8 Hz · versions with 0.16 Hz, with 20 mA, and DSIw-ACC in an IP67 housing
DSI-CHG	charge · DSI-CHG-50 up to 50 000 pC, AC 0.07 Hz, 100 kHz · DSI-CHG-DC 1 … 500 kpC, drift < 0.1 pC/s, expressly supported by the STG amplifiers
DSI-TH	thermocouples · DSI-TH-UNI for K, J, T, R, S, N, E, B and C with cold junction compensation to 0.5 °C · single types as DSI-TH-K, -J, -T, -E, -C
DSI-RTD	PT100, PT200, PT500, PT1000 and PT2000 · 2-, 3- and 4-wire · Binder 710 mating connector included
DSI-LVDT	LVDT sensors · excitation 4 … 10 kHz, phase adjustment by trimmer · output 1 V = 1000 mV/V
Current adapters	DSI-20mA with a 50 Ω internal shunt, 0.01 % · DSI-5A with 10 mΩ, 0.1 % · DSIi-10A and DSIi-20A isolated, < 0.5 %
Every DSI adapter	TEDS chip to IEEE 1451.4, detected automatically · aluminium DSUB-9 housing with screw locking · IP20, the DSIw types IP67

Power supply	PS-120-L1T8m 24 V DC, 5 A, 120 W · PS-200-L1T8m 24 V DC, 8.3 A, 200 W · 8-pole LEMO male, connected to the OUT socket
EtherCAT cable	DS-EtherCAT, 8-pole LEMO L1T8m to L1T8f · data, power and sync between the modules

Some DSI adapters are restricted to certain host amplifiers; octogon will advise on request. Mating connectors, DSI adapters and EtherCAT cables are accessories.

4 Mounting

4.1 Dimensions

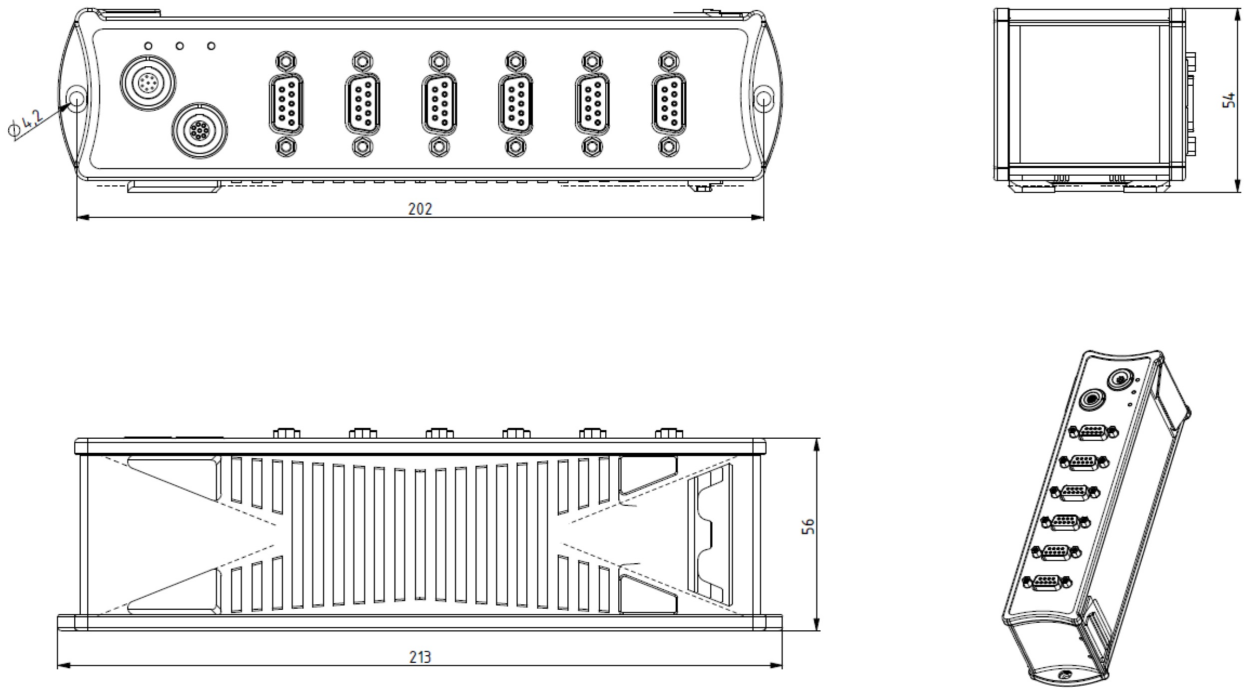

Dimensions in mm (dual-width housing). Depth with the connectors fitted: 58.2 mm.

Housing 213 × 54 × 56 mm, 213 × 54 × 58.2 mm with connectors; weight 1100 g. The drawing shows a hole of Ø 4.2 mm in each end lug of the housing.

4.2 Place of installation

- Operating temperature –40 … +85 °C, humidity 5 … 100 % RH, IP67.
- The small size allows the module to be placed in tight places near the sensors; keep the sensor cables short.
- Avoid operation in the immediate vicinity of high magnetic or electromagnetic fields, transmitting antennas or high-frequency generators.
- The product heats during operation. Make sure there is adequate ventilation.
- Do not switch on the module after transporting it from a cold into a warm room and vice versa; acclimatise it unpowered to room temperature.

4.3 Stacking modules

Modules can be stacked together. The mechanical lock mechanism is on the top and bottom of each module.

- To lock two modules, first fit the nose of the bottom lock part into the matching part of the other module.
- Apply a little force to move the module to the right, until the second part of the mechanism can move down.
- Release the force: the spring in the mechanism moves back to the left, and both modules are locked.
- To release the lock, reverse the procedure: move the top module to the right until you can lift it up a little; the modules are then separated again.

5 Sensor connection

Each channel has its own DSUB-9 female connector, numbered 1 to 6 on the front panel. The connections below are taken from the wiring diagrams of the source documentation; the pin number is given in brackets.

5.1 Pin assignment of the input connector

Pin	Name	Description
1	Exc+	Excitation +
2	In+	Input +
3	Sns–	Sense –
4	GND	Ground
5	R+	¼ bridge / shunt
6	Sns+	Sense +
7	In–	Input –
8	Exc–	Excitation –
9	TEDS	TEDS

5.2 Voltage

Single ended

Module pin	Connect to
In+ (2)	sensor output
In– (7)	sensor GND
GND (4)	linked to In– (7) in the connector

Differential

Module pin	Connect to
In+ (2)	sensor output (+)
In– (7)	sensor output (–)
GND (4)	sensor ground (power ground of the sensor)
Cable shield	connected on the module side

Important Use the differential connection only when sensor output (+) and output (–) are referenced to GND. GND must be connected.

5.3 Bridge

Half and quarter bridges are completed inside the module (120 Ω and 350 Ω). The internal shunt resistor (100 kΩ) for the shunt calibration check is switched in by the software and acts through pin R (5). Note: in the wiring diagrams of the source documentation the sense leads Sns+ (6) and Sns– (3) are drawn dashed to the bridge, and pins 1–6 and 3–8 are linked in the connector.

Full bridge

Module pin	Connect to
Exc+ (1)	bridge excitation +
Sns+ (6)	linked to Exc+ (1) in the connector; sense lead to bridge excitation + (see note above)
In+ (2)	bridge output +
R (5)	linked to In+ (2) in the connector
In– (7)	bridge output –
Exc– (8)	bridge excitation –
Sns– (3)	linked to Exc– (8) in the connector; sense lead to bridge excitation – (see note above)
Cable shield	connected on the module side

Half bridge

Module pin	Connect to
Exc+ (1)	upper end of the half bridge
Sns+ (6)	linked to Exc+ (1) in the connector; sense lead to the upper end (see note above)
In+ (2)	centre tap of the half bridge
R (5)	linked to In+ (2) in the connector
Exc– (8)	lower end of the half bridge
Sns– (3)	linked to Exc– (8) in the connector; sense lead to the lower end (see note above)
In– (7)	not connected externally: the other half is completed inside the module
Cable shield	connected on the module side

Quarter bridge (3-wire)

Module pin	Connect to
R (5)	one end of the strain gauge (first wire)
In+ (2)	the same end of the strain gauge (second wire)
Exc– (8)	other end of the strain gauge (third wire)
Exc+ (1), Sns+ (6)	linked together in the connector
Sns– (3)	linked to Exc– (8) in the connector
In– (7)	not connected externally: the other three arms are completed inside the module
Cable shield	connected on the module side

5.4 Current

External direct shunt

Module pin	Connect to
In+ (2)	current output (+) of the sensor and one end of the external shunt
In– (7)	current output (–) of the sensor and the other end of the external shunt
GND (4)	linked to In– (7) in the connector

External loop-powered shunt (4 ... 20 mA output)

Module pin	Connect to
Exc+ (1), Sns+ (6)	linked together; to the (+) terminal of the 4 ... 20 mA output
In+ (2)	(–) terminal of the 4 ... 20 mA output and one end of the external shunt
In– (7), Exc– (8), Sns– (3)	linked together; to the other end of the external shunt

5.5 Potentiometer

Module pin	Connect to
Exc+ (1), Sns+ (6)	linked together; to one end of the potentiometer
In+ (2)	wiper
Exc– (8), Sns– (3)	linked together; to the other end of the potentiometer
Cable shield	connected on the module side

5.6 DSI adapters and TEDS

With DSI adapters the channel is extended to IEPE (DSI-ACC), thermocouples (DSI-TH), resistance thermometers (DSI-RTD), LVDT (DSI-LVDT), charge (DSI-CHG) and current (section 3.5). TEDS sensors are supported as standard and through the DSI adapters (pin 9).

6 EtherCAT connection and power supply

Data, synchronisation and power run through one cable. The module needs no separate supply connection: power is fed through the OUT connector of a module in the chain and passed on through the EtherCAT cables.

6.1 EtherCAT connectors IN and OUT

Pin	Name	IN (LEMO 1T 8-pin male)	OUT (LEMO 1T 8-pin female)
1	TX_P	Transmission +	Transmission +
2	TX_N	Transmission –	Transmission –
3	RX_P	Reception +	Reception +
4	RX_N	Reception –	Reception –
5	VCC	PWR IN	PWR OUT
6	VCC	PWR IN	PWR OUT
7	GND	Ground	Ground
8	GND	Ground	Ground

Connector	On the device	Mating connector (for the cable)
IN	EGJ.1T.308.CLD	FGJ.1T.308.CLL.1433
OUT	EGG.1T.308.CLN	FGG.1T.308.CLA.1433

Cable	Use
EtherCAT cable L1T8m – L1T8f (DS-EtherCAT)	data, sync and power between the modules: OUT of one module to IN of the next
L1T8f – RJ45	EtherCAT connection from the Ethernet port of the PC to IN of the first module

6.2 Connecting the module to a PC

- Connect the power supply (standard: PS-120-L1T8m) to the OUT connector (8-pin LEMO).
- Connect the Ethernet cable (L1T8f – RJ45) to the IN connector of the module.
- Connect the other side of the Ethernet cable (RJ45) to the LAN port of the PC. Since EtherCAT is compatible with Ethernet, any standard Ethernet card should work.
- As soon as the data cable is connected, the L LED is active.

In a chain, the PC is connected to IN of the first module, OUT of each module to IN of the next, and the power supply to OUT of the last module.

Important Connect the data cable directly to the Ethernet card of the PC. Do not use any switches or hubs.

6.3 System limits

- Cable length up to 100 m from module to module.
- Up to 64 units or more in one chain; power injectors may be required.
- Bandwidth: the recommendable upper limit for one EtherCAT chain is around 6 MB/s. If the maximum bandwidth is exceeded, additional data lines are needed.
- Voltage drop: with very long cables the voltage drop is bigger, so fewer devices can be supplied further down the chain. For a long power supply cable consider a thicker cable.
- Power: add up the power consumption of all devices in the chain (5.9 W (8.9 W with 120 Ω bridges at 5 V excitation) for this module). If the power supply is not sufficient for all devices, a power injector must be added in the middle of the chain.

6.4 Power supply and power injector

The power supply is available as an option. Its 8-pin LEMO connector is connected directly to the OUT connector of the module.

Article number	Output voltage	Current	Power	Connector
PS-120-L1T8m	24 V DC	5 A	120 W	8-pin LEMO male (L1T8m)
PS-200-L1T8m	24 V DC	8.3 A	200 W	8-pin LEMO male (L1T8m)

Power supply range of the module: 9 ... 48 V DC.

A power injector feeds power into long EtherCAT chains. It needs an external power supply and is connected directly between the EtherCAT devices.

Hint To transfer the most power, connect a longer EtherCAT cable (e.g. 50 m) before the power injector and a shorter EtherCAT cable (e.g. 1 m) to the next device, so the voltage drop will be on the shorter cable.

Caution Be careful not to connect the power supply on both ends of the EtherCAT chain. This connection will permanently damage the devices.

6.5 More than one EtherCAT chain

When more than one EtherCAT chain is needed, switches cannot be used. Two solutions:

- Use a computer with more than one Ethernet port: every chain works individually with the full 100 Mbit/s. The chains then need to be synchronised to each other, so every chain also needs a sync junction.
- Use an EtherCAT hub junction: several chains are possible, but the speed is limited to the speed of a single chain. The chains behave as one, so no additional synchronisation is needed.

For the matching accessories please contact octogon.

7 Commissioning and operation

7.1 Software and PC

The module is configured and operated with the data acquisition software included with the module. The software runs on Windows; the source names a PC with Windows 10 (older versions like Windows 7 may also work). The module is supported from software version X2-SP4. Install the latest version of the software; the software can check for updates itself (Options › Check for updates).

You need: the module, the EtherCAT cable and the PC with the software.

7.2 First measurement

– Connect the module as described in section 6.2. The connected module shows up in the software settings (Options › Settings › Devices) with serial number, firmware version etc. If you add a device while this screen is open, press Refresh to scan for devices.

– Click Ch. setup to switch to the channel setup. A preview of the connected devices is shown; clicking a connector in the image selects the corresponding channel and vice versa.

– By default only the first channel is set to Used. Unused channels do not show up in measure mode and cannot be used for display, calculations or storing: set the required channels to Used.

– With the Setup button of a channel you change all settings of the channel amplifier.

– Set the sample rate. It is set for all connected modules, up to the maximum sampling rate of each module (here 20 kS/s per channel).

– Click Measure to see live data. Data is not stored automatically: press Store to start storing and Stop to end the recording.

– Click Analyze to open the last recorded data file for analysis and export.

Hint Sample 10 to 20 times faster than the frequency of the signal you want to measure, e.g. 1000 S/s for a 50 Hz sine wave; with many high-frequency components up to 100 times faster. For frequency analysis (FFT) only, 2.5 times faster is sufficient. A higher sample rate also means more data on the EtherCAT line and larger files.

7.3 Status LEDs

The module has three green LEDs: L – D – L.

The LED blinking codes adhere to the EtherCAT specification. L means Link: the IN connector (left L LED) or the OUT connector (right L LED) is linked to another module or to the measurement PC. D is for Data: it is active only when data transfer is active; this requires that power is connected and that the module is linked to another module or a PC. Older versions may have the label P (for Protocol) instead of D.

State	D LED	Meaning
INIT	off	power applied, no EtherCAT master connected (software not running or module not connected to the PC); the L LED is on when another module is connected
PRE-OP	blinking fast	the EtherCAT master detects the modules and reads their basic information (device settings open or set-up loading)
SAFE-OP	blinking slowly	the master reads the data at a slow sampling rate (channel set-up)
OP	on	the master reads the data at the desired sampling rate (measure mode)
Connection to the PC lost	blinking slowly, L LED on	connection to the PC lost while the configuration was in the operation state

7.4 Firmware upgrade

– The firmware upgrade package is a .dxu file; please ask octogon for the current package.

– Unzip the file and copy it into the Firmwares folder of the software installation.

– Connect the module to the PC and start the software.

– Go to the settings, Update tab. If the firmware package is not selected, select it with the folder button.

– Select the device you want to upgrade and start the upgrade with the Upgrade button.

7.5 Licensing

The module comes with an embedded software licence. The licence details with all available options are shown in the Licensing tab of the settings. If the licence is upgraded with an additional extension, the software requires a new licence registration, online or offline (import of an offline licence, which can be pre-registered on a different PC with an internet connection). If needed, the licence can also be written on the device. Active and embedded licences are shown under Active licenses; a licence recognised as not active usually means that the wrong licence was entered.

Hint Licences for the module only work when the module is connected to the PC and has been activated in the hardware set-up.

7.6 Troubleshooting

If the module is not found by the software:

- If you did not restart Windows after the software installation, restart now.
- Make sure that you have started software version X3 SP8 or higher.
- Make sure that the external power supply is connected and okay.
- Disconnect the EtherCAT cable and reconnect it. If this does not work, try to connect the EtherCAT cable to another Ethernet port of the PC.
- Restart the software; restart the PC.
- Connect the data cable directly to the Ethernet card of the PC. Do not use any switches or hubs.
- Check that the EtherCAT DAQ filter driver is installed on the PC; if it is installed, make sure the checkbox in front of the driver is checked. If the driver is not installed, please ask octogon.
- If the driver is installed and the module is still not recognised, set Speed & Duplex of the network card manually to 100 Mbps Full Duplex (network connections › right-click the connection › configure › advanced), since EtherCAT is defined for 100 Mbit/s.
- With Windows 7, Service Pack 1 is required, which accepts the 256-bit certificates.

8 Maintenance, calibration and disposal

8.1 Calibration

Every instrument needs to be calibrated at regular intervals. The standard norm across nearly every industry is annual calibration. The module is calibrated before delivery. Detailed calibration reports can be requested; they are retained for at least one year after delivery.

8.2 Maintenance and repair

- Maintenance must be executed by qualified staff only.
- The module must not be changed, rebuilt or opened. Do not disassemble it.
- If you assume the module is damaged, remove power, do not use it and have it examined by authorized personnel. For service and repair please contact octogon.

8.3 Environment and disposal

The product is an electronic instrument designed with consideration for environmental impact during its design and use phase. The materials and components used comply with the requirements of the RoHS Directive (2011/65/EU) and the REACH Regulation (EC No. 1907/2006), with no intentional use of restricted or prohibited hazardous substances. During normal operation, the product does not generate direct environmental emissions and features low power consumption. The device is designed for long-term use and serviceability, supporting an extended product lifetime. The product enclosure is made of aluminium, and selected components of the product are suitable for material recycling.

At the end of its service life, the product shall not be disposed of as unsorted municipal waste and shall be collected separately in accordance with the WEEE Directive (2012/19/EU). The crossed-out wheeled bin symbol on the product, packaging, or accompanying documentation indicates that the equipment must be returned to an authorized collection point for waste electrical and electronic equipment. Recycling, recovery, and disposal activities shall be carried out by authorized operators in compliance with applicable local, national, and EU environmental regulations.

For proper treatment, recovery and recycling of old products and batteries, please take them to applicable collection points in accordance with your national legislation. Penalties may be applicable for incorrect disposal of this waste, in accordance with national legislation.

9 Directives and standards

Subject	Directive / standard
Hazardous substances	RoHS Directive 2011/65/EU
Chemicals	REACH Regulation (EC) No 1907/2006
Waste electrical and electronic equipment	WEEE Directive 2012/19/EU
Shock	SIST EN 60068-2-27:2009
Vibration	MIL-STD-202G, method 214A, test condition II-D

Declaration of conformity on request.

10 Glossary

Term	Explanation
AAF	Anti-aliasing filter.
Bit	The basic unit of information storage, a single binary digit that is either 0 or 1.
dB	The decibel is a logarithmic unit that indicates the ratio of a physical quantity (usually power or intensity) relative to a specified or implied reference level. A ratio in decibels is ten times the logarithm to base 10 of the ratio of two power quantities.
Dynamic range	The ratio of a specified full scale input range to the minimum detectable value (peak spurious signal), expressed in decibels (dB).
FFT	Fast Fourier transformation: shows the frequency components of the acquired signals in amplitude and frequency.
GND	The electrical ground (aka. earth).
Hz	The SI unit of frequency, defined as the number of cycles per second of a periodic signal.
LED	A light-emitting diode is a semiconductor light source. It is used to indicate the status of the module.
LEMO	High-quality push-pull connectors used for cable connections, e.g. the EtherCAT and power supply cables.
RMS	Root mean square, also known as the quadratic mean: a statistical measure of the magnitude of a varying quantity, especially useful when variables are positive and negative, e.g. sinusoids.
SNR	Signal-to-noise ratio: the ratio of the RMS value of the full scale input range to the total RMS noise measured with the inputs shorted together, expressed in decibels (dB).