OCTOGON

MANUAL

EKME

DIGITAL THERMOCOUPLE TRANSMITTER

Operating manual



Document	Version	Date	Applies to
Operating manual	V00x	10/2026	EKME, head and rail version, thermocouples, 4 ... 20 mA

This English version is a translation of the German version (EKME Manual V00x DE) by octogon. The German version is authoritative.

This operating manual describes transport, safety, mounting, connection, configuration, fault recovery and maintenance of the EKME digital temperature transmitter in head and rail version, with and without Ex option.

Contents

1 General ... 2
1.1 For your information ... 2
1.2 Signs and abbreviations ... 3
1.3 Device ... 3
2 Transport, packaging, storage ... 3
2.1 Transport ... 3
2.2 Packaging ... 3
2.3 Storage ... 4
3 Safety instructions ... 4
3.1 Intended product use ... 4
3.2 Personnel qualification ... 4
3.3 Special hazards ... 4
3.4 Responsibility of the operator ... 5
3.5 Ex marking and approval ... 5
4 Start-up, operation ... 5
4.1 Function ... 5
4.2 Before mounting ... 6
4.3 Product labels (example) ... 6
4.4 Mounting ... 6
5 Electrical connection ... 8
5.1 Notes ... 8
5.2 Required tools for screw terminals ... 8
5.3 Auxiliary power ... 8
5.4 Maximum values ... 8
5.5 Load diagram ... 9
5.6 Wiring terminals assignment ... 9
6 Configuration ... 9
6.1 Configuration ... 9
6.2 Configurable monitoring functions ... 10
6.3 Configuration with the PC ... 10
7 Fault recovery ... 10
8 Maintenance, dismounting, return, cleaning, disposal ... 11
8.1 Maintenance ... 11
8.2 Dismounting ... 11
8.3 Return ... 11
8.4 Cleaning ... 11
8.5 Disposal ... 11
9 Technical data ... 12
10 Dimensions (in mm) ... 16
11 Accessories ... 16
11.1 Available accessories ... 16
11.2 Connection of the programming unit ... 16
11.3 Configuration software ... 16
11.4 Software configuration ... 17

1 General

1.1 For your information

– These operating instructions contain important information on handling the EKME. Working safely requires that all safety instructions and work instructions are observed.

– Skilled personnel must have carefully read and understood these operating instructions prior to mounting and start-up of the digital temperature transmitter.

– These operating instructions are part of the product. Keep them in a place near the place of use that is accessible to all users at any time.

– Observe the local regulations and safety regulations applicable to the range of use of the EKME.

– If the serial number on the product label becomes illegible (e. g. through mechanical damage), traceability can no longer be ensured.
– The EKME digital temperature transmitters described in these operating instructions are designed and manufactured using state-of-the-art technology. Every component undergoes strict quality and environmental criteria during manufacture.
– The manufacturer's liability is void in the case of any damage caused by using the product contrary to its intended use, non-compliance with these operating instructions, assignment of insufficiently qualified skilled personnel or unauthorised modifications to the digital temperature transmitter.
– For the explosion protection, the standards EN 60079-0:2012+A11:2013 General requirements and EN 60079-11:2012 Intrinsic safety "i" were applied.
– Associated data sheet: EKME Datasheet V00x.

1.2 Signs and abbreviations

Sign	Meaning
Warning	Non-compliance can cause injuries to persons and/or the destruction of the device. There can be danger to life.
Attention	Non-compliance can cause faulty device operation or lead to property damage.
Information	Non-compliance can influence device operation or cause unintentional device reactions.
Danger – electrical power	If the safety instructions are not complied with, there is a risk of serious or fatal injury caused by electrical power.
Danger – hazardous area	Possibly dangerous situation in the hazardous area. Non-compliance can lead to death or serious injuries!
Warning – hot surface	A dangerous situation may occur which can result in burns from hot surfaces or liquids if it is not avoided.
Ex option only	Section only applies to the version with Ex option (marking by octogon).

1.3 Device

Feature	Version
Design	digital temperature transmitter, head version (for DIN connection heads of form B) or rail version (for standard rails according to IEC 60715)
Input	thermocouple type K (standard), J, B, N, R, S, T, E, C, A, L, L (GOST R 8.585 - 2001), 2-wire circuit
Output	4 ... 20 mA, 2-wire current loop
Explosion protection	option: intrinsically safe (Ex ia)
Manufacturer type	DTT

2 Transport, packaging, storage

2.1 Transport

Check the device for any damage that may have been caused during transport. Report obvious damage immediately.

Attention Damage caused by improper transport

Improper transport can cause damage to property and minor injuries.

– Do not use digital transmitters that are damaged on the outside!

2.2 Packaging

Do not remove the packaging until just before mounting. Keep the packaging, as it provides optimum protection during transport (e. g. change of installation site, return).

2.3 Storage

Permissible storage conditions:

- Storage temperature: –40 ... +85 °C
- Humidity: 95 % r. h. (condensation permitted)

For longer storage avoid the following influences:

- Direct sunlight or proximity to hot objects
- Mechanical vibration, mechanical shock (putting it down hard)
- Soot, vapour, dust and corrosive gases

If possible, store the device in its original packaging or in an equivalent packaging.

3 Safety instructions

Warning Before mounting, start-up and operation, select the correct digital temperature transmitter in terms of function and equipment.

Information More important safety instructions can be found in the individual chapters.

3.1 Intended product use

The EKME has been designed and built solely for the intended use described here and may only be used accordingly.

The technical specifications contained in these operating instructions must be observed. Improper handling or operation of the device outside of its technical specifications requires the device to be taken out of service immediately and an inspection by the manufacturer.

When the device is transported from a cold into a warm environment, the formation of condensation may result in the device malfunctioning. Before putting it back into operation, wait for the device temperature and the room temperature to equalise.

Claims of any type based on use contrary to the intended use are excluded.

3.2 Personnel qualification

Warning **Risk of injury if qualification is insufficient**

Improper handling can result in considerable injury and damage to equipment.

- The activities described in these operating instructions may only be carried out by skilled personnel who have the qualifications described below.
- Keep unqualified personnel away from hazardous areas.

For mounting and start-up of the EKME, the personnel must be familiar with the relevant national regulations and standards and have the corresponding qualification. They must have knowledge of measurement and control technology, be acquainted with electric circuits, be capable of carrying out the work described and independently recognise potential hazards.

The personnel must have training suitable for the working environment and must comply with the provisions of the applicable statutory accident prevention regulations!

Special knowledge is required when working with devices for hazardous areas!

The personnel must have knowledge of types of protection, regulations and ordinances for equipment in hazardous areas. Depending on the operating conditions, other knowledge may also be required, e. g. of aggressive media.

3.3 Special hazards

Warning Observe the national regulations (e. g. standards) and, for special applications, the applicable standards and directives.

If the appropriate regulations are not observed, serious injuries and damage to property can occur!

Warning A protection from electrostatic discharge (ESD) is required.

The proper use of grounded work surfaces and personal wrist straps is required when working with exposed circuitry (printed circuit boards), in order to prevent static discharge from damaging sensitive electronic components.

Danger – electrical power There is a danger of death caused by electric current. Upon contact with live parts, there is a direct danger of death.

Electrical devices may only be installed and mounted by skilled electrical personnel.

Operation using a defective power supply unit (e. g. short circuit from the mains voltage to the output voltage) can result in life-threatening voltages at the device.

Warning Do not use this device in safety or emergency stop devices. Incorrect use of the device can result in injury.

Danger – hazardous area There is a danger to life due to hazardous areas. Situations may occur that lead to death or serious injuries.

3.4 Responsibility of the operator

The device is used in the commercial sector. The operator is therefore subject to the legal obligations for occupational safety.

The operator must ensure compliance with the safety instructions of these operating instructions and with the safety, accident prevention and environmental protection regulations valid for the range of use of the device.

The operator is obliged to keep the product label legible.

The responsibility for the zone classification lies with the plant operator and not with the manufacturer or supplier of the equipment.

3.5 Ex marking and approval

Ex option only This section only applies to the version with Ex option (order code Ex version: intrinsically safe).

Before mounting and start-up of the EKME, be sure to read the operating instructions!

Danger – hazardous area **Danger to life due to loss of explosion protection**

Non-compliance with these contents and instructions can lead to the loss of explosion protection.

- Observe the safety instructions and explosion instructions in these operating instructions.
- Observe the requirements of the ATEX directive.
- Comply with the information in the applicable type examination certificate and with the respective national regulations for installation and use in hazardous areas (e. g. IEC 60079-14, NEC, CEC).

Check whether the classification is suitable for the application. Observe the respective national regulations and provisions.

Type overview of the European approvals

Type	Ex marking	Type of protection
EKME head version, Ex version	II 1G Ex ia IIC T6...T4 Ga II 1D Ex ia IIIC T135 °C Da	Intrinsically safe equipment
EKME rail version, Ex version	II 2(1)G Ex ia [ia Ga] IIC T6...T4 Gb II 2(1)D Ex ia [ia Da] IIIC T135 °C Db	Intrinsically safe equipment

For an explanation of the type coding, see data sheet EKME, section Order code.

4 Start-up, operation

4.1 Function

The EKME digital temperature transmitter is a universal measuring transducer for thermocouples that can be configured via PC. The device converts a thermoelectric voltage into a proportional current signal of 4 ... 20 mA. The sensors are permanently monitored for correct function.

The temperature transmitter meets the requirements for:

- Explosion protection (depending on the version)
- Electromagnetic compatibility according to NAMUR recommendation NE21
- Signalling at the analogue output according to NAMUR recommendation NE43
- Sensor break signalling according to NAMUR recommendation NE89 (corrosion monitoring of the sensor connection)

4.2 Before mounting

- Check whether a completely assembled EKME has been supplied.
- Inspect the transmitter for possible damage during transport. If there is any such damage, inform the transport company and the supplier immediately.
- Keep the packaging, as it offers optimum protection during transport.
- Make sure that the connection contacts are not damaged.

4.3 Product labels (example)

Field	Meaning
Art.Nr.	article number
SN	serial number
PN	part number

Information The product labels of the head version and the rail version may differ from the final form due to short-term changes.

Note: The Ex marking and the type coding are always included.

4.4 Mounting

Danger – hazardous area **Danger to life due to explosion!**

Working in flammable atmospheres involves a risk of explosion that can lead to death.

- Carry out set-up work only in a non-hazardous environment!
- In the hazardous area, only use EKME that are approved for this hazardous area.

Please observe the approval on the product label!

Information

- Check the delivery immediately after receipt for completeness and recognisable defects.
- If parts are missing or you find defects, inform the transport company and the supplier immediately.

4.4.1 Special conditions for safe use

Ex option only This section only applies to the version with Ex option (order code Ex version: intrinsically safe).

Information Please take into account the influence of the power loss of other devices installed next to the transmitter with regard to an increase in the ambient temperature of the transmitter.

Safe installation of the EKME with Ex option

- Install the transmitter in a housing suitable for the respective installation area that complies with IEC 60079-11. For use in areas requiring EPL Ga, Gb or Gc, the housing must comply with at least IP20 and for use in areas requiring EPL Db or Dc, with at least IP54 according to IEC 60079-0.
- When the device is installed in a housing, the internal wiring, clearances and creepage distances as well as separation distances must comply with IEC 60079-11.

General notes

Transmitters with ia marking can also be used in supply circuits of type ib with the same connection parameters. The entire measuring circuit including the sensor circuit is then an ib circuit.

EKME that have been operated in supply circuits of type ib must not be reused in supply circuits of type ia.

The externally connected cables or conductors must be suitable for the temperature range of the end application! (max. 85 °C)

The conductor cross-section must be at least 0.14 mm²!

4.4.2 Earthing

Attention **Damage to property due to electrostatic charging!**

Observe safety measures according to DIN EN 61340-51/-3 to avoid electrostatic charging!

Electrostatic charges can occur during ongoing process operation. Please take measures to avoid electrostatic discharges onto the connection terminals. The discharges can lead to temporary falsification of the measured value.

- Only use the head version of the EKME in earthed thermometer heads!
- A thermocouple (e. g. type K) is connected to the rail version of the EKME with a shielded cable.
- The shield must be connected in an electrically conductive manner to the housing of the earthed thermometer.

Information Work on the electronics may only be carried out by qualified skilled personnel.

Earthing examples (source figures as text):

Example	Set-up
Earthing head version	Transmitter in connection head BSZ, connection head earthed, loop cable from the connection head. Only use the EKME temperature transmitter in earthed thermometers!
Earthing head version, shielded	Connection head BSZ with protective tube with sensor, earthed; shield of the sensor cable earthed at the connection head; sensor cable to the transmitter in the field housing/control cabinet, earthed; potential equalisation between connection head and field housing/control cabinet.
Earthing rail version, shielded	Sensor with sensor cable, shield earthed; transmitter in the field housing/control cabinet, earthed; potential equalisation between sensor and field housing/control cabinet.

Please note:

In applications with increased EMC requirements, especially in connection with long cables to the sensor, the use of a shielded cable between transmitter and sensor is recommended.

For the rail version and cable lengths over 30 m, a shielded cable is mandatory.

4.4.3 Mounting EKME head version

Information When mounting the head version, do not exceed a torque of 1 Nm!

The EKME in head version are intended for mounting on a measuring insert in a DIN connection head of form B with extended mounting space.

The connecting wires of the measuring insert must be approx. 50 mm long and insulated!

Mounting example

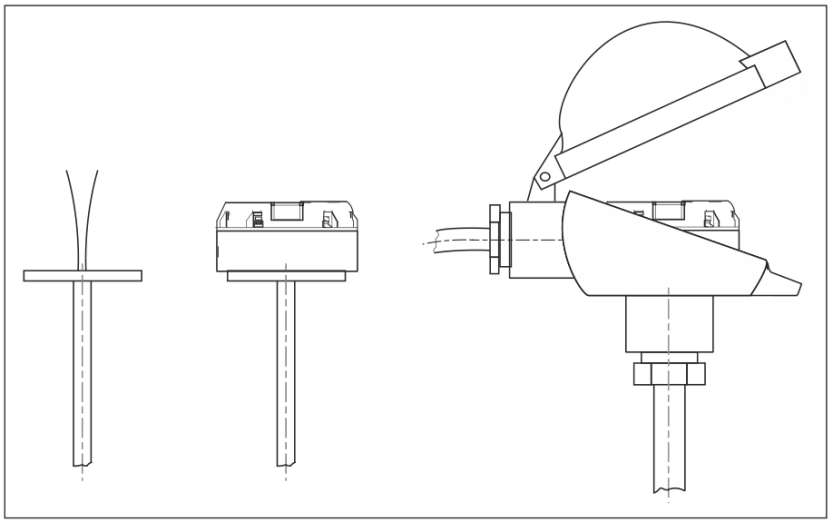

Mounting in the connection head

Insert the measuring insert with the mounted transmitter into the protective fitting and fasten it spring-loaded with screws.

Mounting in the connection head cover

When mounting in the cover of a connection head, use appropriate screws and suitable washers.

Mounting with DIN rail adapter

With the mechanical adapter available as an accessory, transmitters in head version can also be fastened on a DIN rail (see section 11, Accessories).

4.4.4 Mounting EKME rail version

Fasten the rail housing by simply snapping it onto a 35 mm DIN rail according to EN 60175 without tools.

Dismounting is done by unlocking the latching element.

5 Electrical connection

5.1 Notes

Danger – electrical power **Danger to life due to electric current**

Upon contact with live parts, there is a direct danger to life!

- Installation and mounting of the device only by skilled personnel!
- When operating with a defective power supply unit, life-threatening voltages can occur at the device!
- Carry out electrical installation only in a de-energised state!
- The connected wires must be firmly seated. Please check the seating, because only firmly connected cables ensure full functionality.

This is equipment of protection class 3 for connection to extra-low voltages that are separated from the mains voltage or from voltages greater than AC 50 V or DC 120 V.

- Preferably connect to SELV or PELV circuits.
- Alternative recommendation: a protective measure from HD 60346-4-41 (DIN VDE 0100-410)

Alternatively for North America

A connection to Class 2 circuits and Class 2 power units according to CEC or NEC is possible.

Please note:

The functional galvanic isolation in the device cannot ensure protection against electric shock within the meaning of EN 61140.

5.2 Required tools for screw terminals

Type	Screwdriver	Tightening torque
EKME head version	Pozidriv, size 2 (ISO 8764)	0.5 Nm
EKME rail version	flat-blade, 3 x 0.5 mm (ISO 2380)	0.5 Nm

5.3 Auxiliary power

Auxiliary power, 4 ... 20 mA current loop

The EKME is a 2-wire supplied digital temperature transmitter and can be supplied with different auxiliary power depending on the version.

Recommendation when using stranded wires:

- Use crimp contacts.

Please note:

- The integrated reverse polarity protection (reversed voltage at terminals + and –) prevents the destruction of the device.

5.4 Maximum values

Version	Maximum auxiliary power
EKME without Ex option	DC 35 V
EKME with Ex option	DC 30 V

Minimum terminal voltage

DC 10 V

Please note:

– The load must not be too high, otherwise the terminal voltage at the device becomes too low at higher currents.

5.5 Load diagram

Maximum permissible load depending on the supply voltage.

Auxiliary power U_B: DC 10 ... 35 V. Load R_A: $R_A \leq (U_B - 10\ V) / 0.0215\ A$, with R_A in Ω and U_B in V.

Auxiliary power U_B	Maximum load R_A	Designation in the diagram
10 V	0 Ω	min. voltage
24 V	651 Ω	operating voltage
30 V	930 Ω	Ex devices
35 V	1163 Ω	non-Ex devices

For Ex-relevant connection values see section 9, Technical data.

5.6 Wiring terminals assignment

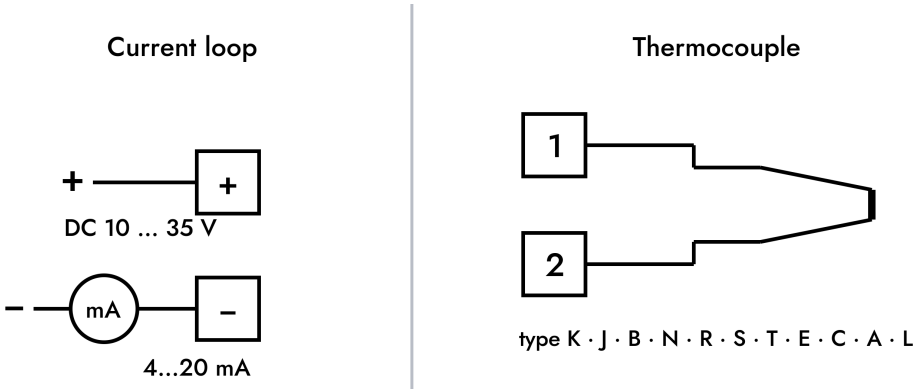

Input: thermocouple at terminal 1 (+) and 2 (–). Output: 4 ... 20 mA loop at terminals + and –.

Terminal	Connection	Version
+ / –	output 4 ... 20 mA loop (auxiliary power)	head and rail version
1, 2	input: thermocouple	head and rail version
+ / –	connection of the programming unit (separate contacts)	rail version

Thermocouples

A thermocouple can be connected in 2-wire circuit. The EKME always uses the internal cold junction.

Information For the safety-related maximum values for the connection of the power supply and the sensors see section 9, Technical data.

6 Configuration

6.1 Configuration

The following can be configured:

– Sensor type
– Sensor connection
– Measuring range

- Unit
- Signalling
- Measurement range monitoring
- Damping
- Write protection
- TAG numbers
- 2-point scaling

The EKME are delivered with a factory setting (see data sheet EKME) or configured according to customer specifications.

- Please note subsequent changes to the configuration on the product label with a waterproof felt-tip pen!

Information A simulation of the input value is not necessary for setting the EKME. A simulation of the sensor is only necessary for the function check.

6.2 Configurable monitoring functions

Measurement range monitoring:

If measurement range monitoring is activated, an error is signalled on the current loop if the measuring range is exceeded or undershot.

6.3 Configuration with the PC

The EKME is configured via the USB interface of a PC with the help of the programming unit and the configuration software.

Information The required Windows device driver for the programming unit is installed automatically during the installation setup of the configuration software.

7 Fault recovery

Danger – hazardous area **Danger to life due to explosion**

Working in flammable atmospheres involves a risk of explosion that can lead to death.

- Carry out troubleshooting only in non-flammable atmospheres!

Warning **Personal injury, damage to property and the environment**

If faults cannot be eliminated with the measures listed, take the device out of operation immediately!

- Make sure that no signal is present any more and secure the device against accidental start-up.
- Contact the manufacturer.
- Have repairs carried out by the manufacturer only!
- Please observe the notes in section 8 and add a short fault description to the temperature transmitter.
- The fault description should contain information on the ambient conditions, the duration of use and the occurrence of the fault.

Information

- Do not use pointed or hard objects for cleaning, as the electrical contacts must not be damaged.
- Check in advance whether the correct power supply and the correct type of wiring have been selected.
- For contact details see data sheet EKME.

Note: Unjustified complaints may result in costs for you.

After changes to the system, always check that it works correctly. If the fault persists, send the transmitter in for repair or replace it.

In the event of service: clean the devices before returning them. See also section 8 for more details.

Fault tree

Symptom	Possible cause
I = 0 mA	Current loop not closed; transmitter not connected; power supply connected incorrectly (reversed polarity)
I > 20 mA; I < 4 mA; 4 mA < I < 20 mA, but wrong values	Process temperature outside the measuring range; sensor break or sensor short circuit; Sensor connected incorrectly; for Sensor = TC: thermocouple with reversed polarity; wrong transmitter configuration (wrong sensor type, wrong temperature range; for Sensor = TC: wrong compensation)
Current value is correct, but a temperature drift can be observed while the transmitter heats up or cools down	for Sensor = TC: wrong compensation
Current value falls although the measured temperature rises (and vice versa)	Thermocouple is connected incorrectly
Current value is not stable and changes within seconds	Electromagnetic interference: capacitive or inductive coupling via the sensor; capacitive or inductive coupling via the current loop
Current value is correct at low temperature values, but too low at higher temperature values	Load too high

8 Maintenance, dismounting, return, cleaning, disposal

8.1 Maintenance

Information

- The EKME temperature transmitters are maintenance-free.
- Have repairs carried out by the manufacturer only.
- The electronics are fully potted and contain no components that could be repaired or replaced.

8.2 Dismounting

De-energise the device completely. Remove the electrical connections. Use section 4.4 in reverse order.

8.3 Return

Warning Before shipping a device, observe section 8.4.

To return the device, use the original packaging or a comparable one.

To protect against damage, e. g. antistatic film, insulating material or a marking as a sensitive measuring instrument can be used.

If possible, please enclose a bag with desiccant.

8.4 Cleaning

Clean the device regularly to keep it free of hazardous substances. The electrical contacts must be kept dry and clean!

Attention **Damage to property!**

Abrasives or aggressive solvents can damage the contacts.

- Before cleaning, switch off the device and de-energise it completely.
- Before returning, the device must be free of hazardous substances such as acids, alkalis, solutions, etc.!

8.5 Disposal

Information Dispose of device components and packaging materials in an environmentally sound manner in accordance with the national waste treatment and disposal regulations.

Collect electrical and electronic components separately. Separate metals and plastics. Dispose of assembled printed circuit boards properly.

9 Technical data

Danger – hazardous area **Danger to life due to loss of explosion protection**

Non-compliance with the information for use in hazardous areas leads to the loss of explosion protection.

– Observe the following limit values and technical information!

Input

Thermocouple	Max. configurable range	Min. measuring span
Type K (standard)	–270 … +1,300 °C	50 K
Type J (option)	–210 … +1,200 °C	50 K
Type B (option)	0 … 1,820 °C	200 K
Type N (option)	–270 … +1,300 °C	50 K
Type R (option)	–50 … +1,768 °C	150 K
Type S (option)	–50 … +1,768 °C	150 K
Type T (option)	–270 … +400 °C	50 K
Type E (option)	–270 … +1,000 °C	50 K
Type C (option)	0 … 2,315 °C	150 K
Type A (option)	0 … 2,500 °C	150 K
Type L (option)	–200 … +900 °C	50 K
Type L (GOST R 8.585 - 2001) (option)	–200 … +800 °C	50 K

Item	Value
Version (for all)	2-wire
Standard	IEC 60584-1; DIN 43710 (only type L)

Output (analog)

Item	Value
Current signal	4 … 20 mA loop
Transmission behaviour	temperature linear according to IEC 60584 / DIN 43710
Current range	3.8 … 20.5 mA (NAMUR NE43)
Error signal	configurable according to NAMUR NE43
Downscale	< 3.6 mA
Upscale	> 21.0 mA
Standard	IEC 60584 / DIN 43710

Environmental conditions

Item	Value
Ambient temperature	standard: –40 … +85 °C; option: –50 … +105 °C (only head version without Ex protection)
Climatic influence	class Cx; standard IEC 654-1:1993; ranges –40 … +85 °C, 5 … 95 % r. h.
Humidity head version	max. 93 % ±3 % r. h.; standard IEC 60068-2-38:2009; test: max. temperature change 65 °C / –10 °C
Humidity rail version	max. 95 % r. h.; standard IEC 60068-2-30:2005; test: max. temperature 55 °C
Vibration resistance	amplitude 0.75 mm; standard IEC 60068-2-6:2008; test Fc: 10 … 2000 Hz; acceleration 10 g
Shock resistance	30 g / 11 ms (rail); 100 g / 6 ms (head); standard IEC 68-2-27:2009
Salt fog	severity level 1; standard IEC 68-2-52:1996, IEC 60068-2-52:1996
Condensation head version	allowed
Condensation rail version	only allowed when mounted vertically
Free fall	fall height 1.5 m; standard IEC 60721-3-2:1997, DIN EN 60721-3-2:1998
EMC	emission group 1, class B; interference resistance industrial sector (HF, field, HF line, ESD, burst, surge); standards DIN EN 55011:2010, DIN EN 61326-2-3:2013, NAMUR NE21:2012, GL 2012 VI Teil 7

Item	Value
CE sign	EMC directive 2014/30/EU; EN 61326: emission (group 1, class B), noise immunity for the industrial sector
RoHS directive	2011/65/EU
ATEX / IECEx	2014/34/EU hazardous areas (option)

Accuracy

To determine the gross error, consider all error causes.

Item	Value
Reference conditions	
Calibration temperature	23 °C ±3 K
Auxiliary power	U_{i_ref} = 24 V
Atmospheric pressure	860 ... 1060 hPa
Temperature coefficient	
Thermocouple (all)	±1.7 K
Output (DA converter)	0.06 % of span
Cold junction	±0.1 K
Influence of auxiliary energy	±0.005 % of span / 1 V
Long-time drift per year	
Thermocouple (all)	40 µV / 0.1 % of measurement value
Output (DA converter)	0.1 % of span
Cold junction	≤ 0.4 K
Influence of auxiliary energy	±0.005 % of span / 1 V
Standard	IEC 61298-2

Error in measurement, thermocouple

Thermocouple	Range 1	Range 2
Type J	≤ 0 °C: 0.45 K + 0.3 % of |measured value|	≥ 0 °C: 0.45 K + 0.045 % of measured value
Type K	≤ 0 °C: 0.6 K + 0.3 % of |measured value|	≥ 0 °C: 0.6 K + 0.06 % of measured value
Type B	≤ 1,000 °C: 2.5 K + 0.3 % of |m. value – 1,000|	≥ 1,000 °C: 2.5 K
Type N	≤ 0 °C: 0.75 K + 0.3 % of |measured value|	≥ 0 °C: 0.75 K + 0.045 % of measured value
Type R	≤ 400 °C: 2.2 K + 0.18 % of |measured value|	≥ 400 °C: 2.2 K + 0.015 % of measured value
Type S	≤ 400 °C: 2.2 K + 0.18 % of |measured value|	≥ 400 °C: 2.2 K + 0.015 % of measured value
Type T	≤ 0 °C: 0.6 K + 0.3 % of |measured value|	≥ 0 °C: 0.6 K + 0.015 % of measured value
Type E	≤ 0 °C: 0.45 K + 0.3 % of |measured value|	≥ 0 °C: 0.45 K + 0.045 % of measured value
Type C	≤ 1,000 °C: 2.2 K + 0 % of |measured value|	≥ 1,000 °C: 2.2 K + 0.175 % of m. value – 1,000
Type A	≤ 1,000 °C: 2.4 K + 0 % of |measured value|	≥ 1,000 °C: 2.4 K + 0.175 % of m. value – 1,000
Type L (DIN 43710)	≤ 0 °C: 0.45 K + 0.15 % of |measured value|	≥ 0 °C: 0.45 K + 0.045 % of measured value
Type L (GOST R 8.585 - 2001)	≤ 0 °C: 0.45 K + 0.15 % of |measured value|	≥ 0 °C: 0.45 K + 0.045 % of measured value

Item	Value
Cold junction	≤ ±1.5 K
DA converter	0.045 % of span
Auxiliary energy influence	±0.005 % of span / 1 V
Standard	DIN EN 60770, NAMUR NE145

Item	Value
Special case NE145: interference by high-frequency electromagnetic fields	
Frequency range 80 ... 400 MHz	up to 0.8 % deviation from range
Transient influence (burst, surge, ESD)	1.5 % deviation from range

The product-specific accuracy specifications refer to the complete device ($Error_{total}$ = $Error_{input}$ + $Error_{output}$).

Accuracy – application examples

Example 1: Thermocouple type K	Calculation	Value
Measurement range	0 ... 400 °C -> span of 400 K	
Environmental temperature	25 °C	
Measured value	300 °C	
Input	300 °C > 0 °C -> 0.6 K + 0.06 % * measured value; 0.6 K + (0.06 % * 300 °C)	±0.78 K
Output	0.045 % * 300 K	±0.135 K
Cold junction	1.5 K	±1.5 K
Typical error in measurement	√(input² + output² + cold junction²)	±1.7 K
Maximum error in measurement	input + TC_{input} + output + cold junction	±2.42 K

Example 2: Thermocouple type K	Calculation	Value
Measurement range	0 ... 600 °C -> span of 600 K	
Environmental temperature	45 °C	
Measured value	550 °C	
Input	550 °C > 0 °C -> 0.6 K + 0.06 % * value; 0.6 K + (0.06 % * 550 °C)	±0.93 K
Input temperature coefficient	45 °C – 26 °C = 9 K -> 2 * 10 K	±0.4 K
Output	0.045 % * 600 K	±0.27 K
Output temperature coefficient	45 °C – 26 °C = 19 K -> 2 * 10 K; 0.06 % * 600 K * 2	±0.72 K
Cold junction	1.5 K	±1.5 K
Cold junction temp. coefficient	45 °C – 26 °C = 19 K -> 2 * 10 K	±4.0 K
Typical error in measurement	√(input² + TC_{input}^2 + output² + TC_{output}^2 + cold junction² + $TC_{cold\ junction}^2$)	±4.5 K
Maximum error in measurement	input + TC_{input} + output + cold junction	±7.8 K

Mechanics

Item	Value
Head version	
Casing material	plastics, PBT, glass-fiber-reinforced
Weight	50 g
Protection category	IP00 (electronics fully potted)
Wiring terminals	captive screws
Wire cross section, solid wire	0.14 ... 2.5 mm² (AWG 24 ... 14)
Wire cross section, litz wire with wire end ferrule	0.14 ... 1.5 mm² (AWG 24 ... 16)
Tools	screwdriver, Pozidriv, size 2, ISO 8764
Tightening torque	0.5 Nm
Electrical connection	see section 5
Rail version	
Casing material	plastics
Weight	0.2 kg
Protection category	IP20
Wiring terminals	captive screws
Wire cross section, solid wire	0.14 ... 2.5 mm² (AWG 24 ... 14)
Wire cross section, litz wire with wire end ferrule	0.14 ... 1.5 mm² (AWG 24 ... 14)
Tools	flat-blade screwdriver, 3 x 0.5 mm, ISO 2380
Tightening torque	0.5 Nm
Electrical connection	see section 5

Time response and monitoring (both versions)

Item	Value
Switch-on time	max. 4 s
Warm-up time	max. 45 min
Note	The data stated in these operating instructions are only reached after the end of the warm-up time!
Step response time	< 0.9 s
Damping	1 ... 60 s (variable configuration)
Typical measurement rate	8/s measured value update
Monitoring	
Sensor break monitoring	configurable, standard: downscale
Sensor short circuit	configurable, standard: downscale
Measurement range monitoring	over-/underflow configurable (standard: deactivated)

Intrinsic Safety Power Ratings for Current Loop (4...20 mA)

Ex option only This section only applies to the version with Ex option (order code Ex version: intrinsically safe).

Protection level Ex ia IIC/IIB/IIA, Ex ia IIIC

Parameters	EKME Ex version Gas-Ex-Application	EKME Ex version Dust-Ex-Application
Terminals	+ / -	+ / -
Voltage U_i	DC 30 V	DC 30 V
Current I_i	130 mA	130 mA
Power P_i	800 mW	750/650/550 mW
Effective inner capacitance C_i	18,4 nF	18,4 nF
Effective inner conductivity L_i	800 µH	800 µH

Sensor Circuit

Parameters		EKME Ex version Ex ia IIC/IIB/IIA Ex ia IIIC
Terminals		1 - 2
Voltage U_o		DC 6,6 V
Current I_o		4 mA
Power P_o		10 mW
Max. external capacitance C_o	IIC	21 µF
	IIB IIIC	495 µF
	IIA	995 µF
Max. external inductance L_o	IIC	95 mH
	IIB IIIC	95 mH
	IIA	95 mH
Specifications		Linear

Concerning the Applied Standards:

Due to distance requirements of the applied standards, the IS power and signal circuit and the IS sensor circuit should be considered as being galvanically connected to each other.

Notes on the Tables:

Quantity	Meaning
U_o	Maximum voltage of any conductor against the other three conductors
I_o	Maximum output current for the least favourable connection of the internal current limiting resistors
P_o	U_o x I_o divided by 4 (linear characteristic)
C_i, L_i	These values have already been considered for Sensor Circuit.

Environmental Temperature Range

Application	Ambient temperature range	Temperature class	Power P_i
Group II	−40 °C ≤ T_a ≤ +85 °C	T4	800 mW
	−40 °C ≤ T_a ≤ +70 °C	T5	800 mW
	−40 °C ≤ T_a ≤ +55 °C	T6	800 mW
Group IIIC	−40 °C ≤ T_a ≤ +40 °C	N / A (not applicable)	750 mW
	−40 °C ≤ T_a ≤ +75 °C	N / A	650 mW
	−40 °C ≤ T_a ≤ +85 °C	N / A	550 mW

10 Dimensions (in mm)

Version	Dimensions in mm
Head version	Ø 44; mounting holes Ø 7 at a distance of 33; height 24.5
Rail version	99 × 113.6 × 17.5

The dimensions of the head version are designed for use with DIN connection heads of form B with extended mounting space.

The rail version is suitable for all standard rails according to IEC 60715.

11 Accessories

11.1 Available accessories

Configuration set with programming unit

The programming unit for the EKME digital temperature transmitter has a compact design and allows simple operation. The status of the device can easily be read from LED indicators.

- No additional power supply is necessary, neither for the programming unit nor for the transmitter.
- The set also contains magnetic quick contacts for the transmitter connection.

Configuration software

A configuration software is available for the EKME, with which the transmitter can be configured. When an EKME is connected to a PC or notebook via a programming unit, the transmitter can be set via the software.

See sections 11.3 and 11.4 for further information on the configuration software and for configuration instructions.

Adapter

A mechanical adapter for installing head versions on a DIN rail.

11.2 Connection of the programming unit

The programming unit is required for direct communication between an EKME and the USB interface of a PC/notebook.

The programming unit is connected to the PC/notebook via USB and with its leads + and – to the transmitter: for the head version at terminals + and – (connection with magnetic quick contact), for the rail version at the two contacts “connection programming unit” (see section 5.6).

11.3 Configuration software

The configuration software is constantly updated and adapted to the firmware extensions of the temperature transmitter. This always ensures full access to all functions and parameters of the transmitter.

Information The current version of the configuration software is available on request.

11.4 Software configuration

The configuration software requires no installation and is ready for use immediately.

11.4.1 Software start

- Start the configuration software by double-clicking the program icon.
- After starting the software, the language can be changed by selecting the corresponding country flag.
- The COM port is selected automatically.
- Connect an EKME via the programming unit to the USB interface of the PC.
- Click the start button to load the configuration interface.

Information

- The configuration interface can only be loaded when a device is connected.
- At this time, only one language (English) can be selected. Further languages are planned.

11.4.2 Configuration interface

The interface has the tabs **Configuration**, **Diagnostics** and **Measurement** as well as the buttons **Load instrument data**, **Load configuration**, **Configuration protocol** and **Write to instrument**; the lock symbol at the bottom right switches the write protection.

11.4.3 Configuration procedure

Steps 1 and 2 are carried out automatically when the software starts.

No.	Step	Note
1	**Load instrument data**	
2	**Load configuration**	
3	Remove / activate write protection	optional, lock symbol at the bottom right
4	Change the desired parameters	sensor/measuring range/error signalling etc.
5	**Write to instrument**	
6	Activate / remove write protection	optional
7	Print the configuration protocol	optional
8	Test: **Load configuration**	check the configuration, optional

11.4.4 Diagnostics

In this section, an error message is displayed if the transmitter detects an error. Examples:

- Sensor break
- Permissible maximum temperature exceeded
- etc.

In normal operation, the message **No fault - No maintenance required** is displayed.

11.4.5 Measured values

Line recorder:

Here the course of the measured values is shown as a line recorder with a constant sampling rate in a defined time grid of 180 seconds and a variable temperature axis.

This display is purely for function testing and information. The data cannot be exported.

11.4.6 Configuring several devices identically

No.	First device	Note
1	**Load configuration**	
2	Remove write protection	optional, lock symbol at the bottom right
3	Change the desired parameters	
4	**Write to instrument**	
5	Activate write protection	optional

No.	All following devices	Note
1	**Load instrument data**	
2	Remove write protection	optional
3	Change the desired parameters	optional
4	**Write to instrument**	
5	Activate write protection	optional