OCTOGON

MANUAL

EFEA

6-CHANNEL STRAIN GAUGE AMPLIFIER WITH BLUETOOTH

Operating manual

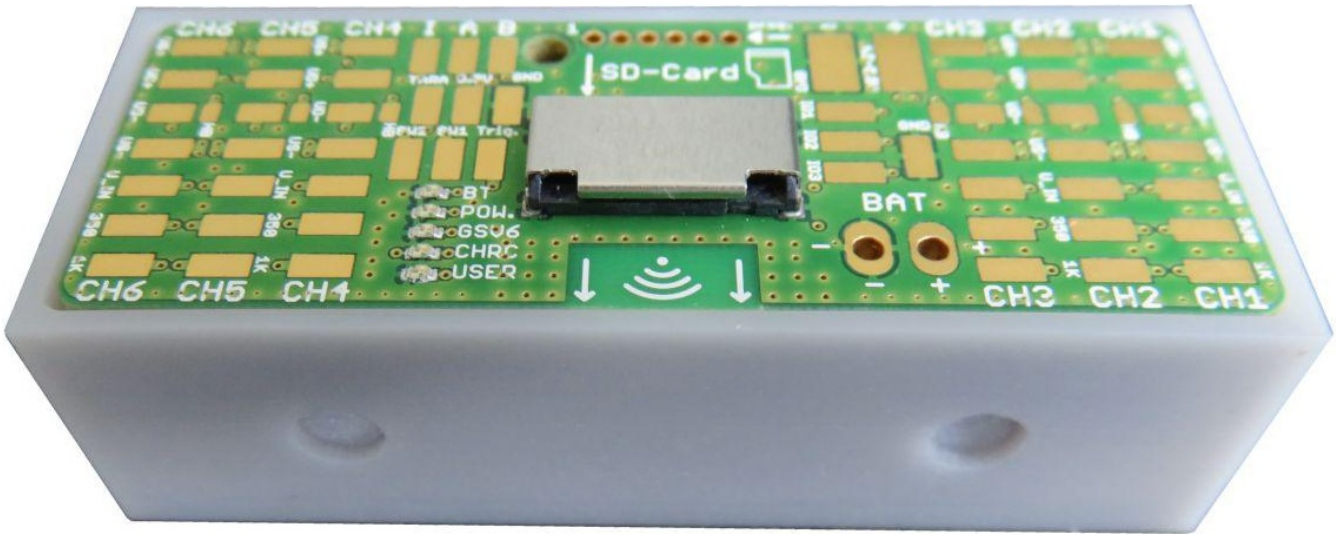

Document	Version	Date	Applies to
Operating manual	V00x	11/2026	EFEA, module with solder pads, Bluetooth, SD data logger

This operating manual describes use, safety, functions, electrical connection, commissioning with the PC software, Bluetooth operation, data logger and technical data of the EFEA 6-channel strain gauge amplifier.

octogon GmbH · Roseggerstrasse 16 · 8700 Leoben · Austria · office@octogon.org

Contents

1 General ... 2
1.1 Use ... 2
1.2 Safety instructions ... 2
1.3 Device ... 3
2 Functions ... 3
2.1 Overview ... 3
2.2 LEDs ... 3
3 Electrical connection ... 4
3.1 Solder pads ... 4
3.2 Strain gauge full bridge ... 4
3.3 Strain gauge half bridge ... 4
3.4 Strain gauge quarter bridge ... 5
3.5 Voltage input 0 ... 10 V ... 5
3.6 Further connections ... 5
3.7 Note on the bridge circuit ... 6
4 Commissioning ... 6
4.1 PC and software ... 6
4.2 Pairing and connecting ... 6
4.3 Setting the real-time clock ... 6
4.4 Setting up the sensor ... 7
4.5 If the connection fails ... 7
5 Bluetooth operation ... 7
5.1 Bluetooth mode ... 7
5.2 Measuring part when disconnected ... 7
5.3 Current consumption ... 8
6 Data logger ... 8
6.1 Configuring the logging ... 8
6.2 Indicators and buttons ... 8
6.3 Downloading files ... 8
7 Technical data ... 9
7.1 Inputs ... 9
7.2 Accuracy and measuring rate ... 9
7.3 Wireless and data logger ... 9
7.4 Digital inputs and outputs ... 9
7.5 Power supply ... 9
7.6 Environment and mechanics ... 10
8 Dimensions ... 10
9 Maintenance ... 10

1 General

1.1 Use

The EFEA is a 6-channel amplifier for strain gauges with a Bluetooth radio link and a data logger on a micro SD card. It is a potted module with gold-plated solder pads and is built into an application together with a lithium-ion battery. It is configured and read out via Bluetooth with a PC.

Use the amplifier only for this purpose and only within the values given in chapter 7. The operator is responsible for the suitability for the application.

1.2 Safety instructions

Warning Read this manual before connecting. Installation, soldering and connection only by qualified staff. Disconnect the battery before soldering. Do not short-circuit or damage the lithium-ion battery. The electronics are sensitive to electrostatic discharge. Do not put a damaged module into operation.

Please note Do not remove the SD card while LED C is lit continuously or flashing slowly: a file is then open for writing and measurement data may be lost.

1.3 Device

Feature	Version
Design	module, potted, with gold-plated solder pads
Measuring channels	6 analogue (channel 1 strain gauge bridge, channels 2 ... 6 strain gauge bridge or voltage 0 ... 10 V), channel 7 pulses (incremental encoder, counter, frequency)
Interface	Bluetooth Classic (SPP) or Bluetooth Low Energy (GATT), switchable
Data logger	micro SD card, real-time clock for time stamps
Supply	lithium-ion battery, charging circuit built in
Manufacturer type	GSV-6L6 Wireless

2 Functions

2.1 Overview

– All analogue channels can be connected as full, half or quarter bridge (bridge completion 350 or 1000 Ω), channels 2 ... 6 alternatively as voltage input 0 ... 10 V (single-ended).

– Channel 1 reads the TEDS memory of the sensor and takes over its scaling and unit.

– Channel 7 acquires digital pulses: incremental encoders, square-wave signals, counter, frequency and speed.

– Number of transmitted and logged channels adjustable from 1 to 7.

– Two configurable threshold outputs, trigger input, tare input for zeroing all channels at the same time.

– Simultaneous sampling of channels 1 to 3 and 2 to 6; with 6-axis sensors the device calculates the three forces and three torques itself.

– Data logger on micro SD card: permanent, on command, periodic with battery saving mode or controlled by the trigger input; files can also be downloaded via Bluetooth.

– Real-time clock for time stamps, two operating hours counters (one absolute, one resettable), measurement of device temperature and battery voltage.

– Charging circuit for the connected lithium-ion battery (3.7 V) built in.

The module contains two control parts: the measuring part (amplifier) and a Bluetooth controller that handles the radio link, switches the measuring part on and off, reads the battery voltage and can be programmed via its own script.

2.2 LEDs

The five LEDs A to E are on the top of the module (position see figure in 3.1):

LED	Marking	Meaning
A	BT	Bluetooth connection: lit = connected
B	POW.	measuring part on/off
C	GSV6	status of the measuring part with flash codes (e.g. TEDS). Lit continuously or flashing slowly: file on the SD card open for writing – do NOT remove the card. Flashing fast after first connecting the battery or after it was empty: set the real-time clock (4.3).
D	CHRG	battery charging indicator
E	USER	freely programmable via the script of the Bluetooth controller

3 Electrical connection

3.1 Solder pads

Sensors, battery and charging voltage are soldered to the gold-plated solder pads. The numbers in the figure are the pad numbers of the following tables; Ch 1 ... Ch 6 (CH1 ... CH6) are the measuring channels.

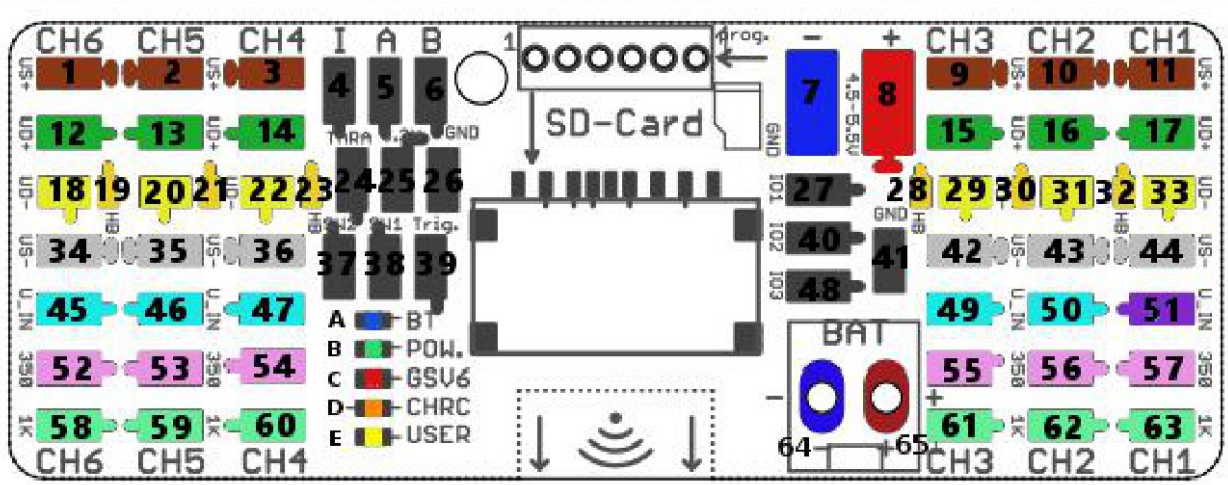

Solder pads, top side (LEDs A ... E to the left of the SD card)

Please note Soldering tip 320 °C at most. Use wires of 0.09 mm² (AWG 28) at most. For half and quarter bridges, solder bridges are closed between two pads (see 3.3 and 3.4).

3.2 Strain gauge full bridge

Connection	Ch 1	Ch 2	Ch 3	Ch 4	Ch 5	Ch 6
Excitation + (+Us)	11	10	9	3	2	1
Signal + (+Ud)	17	16	15	14	13	12
Signal – (–Ud)	33	31	29	22	20	18
Excitation – (–Us)	44	43	42	36	35	34

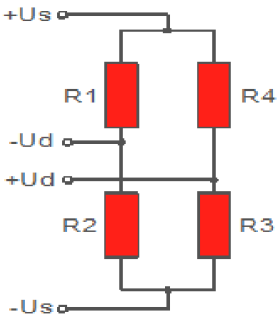

Full bridge R1 ... R4

3.3 Strain gauge half bridge

Connect the active strain gauges R3 and R4 to +Us, +Ud and –Us. The internal half bridge R1, R2 is activated with a solder bridge from –Ud to HB:

Connection	Ch 1	Ch 2	Ch 3	Ch 4	Ch 5	Ch 6
Excitation + (+Us)	11	10	9	3	2	1
Signal + (+Ud)	17	16	15	14	13	12
Solder bridge from –Ud ...	33	31	29	22	20	18
... to HB (half bridge)	32	30	28	23	21	19
Excitation – (–Us)	44	43	42	36	35	34

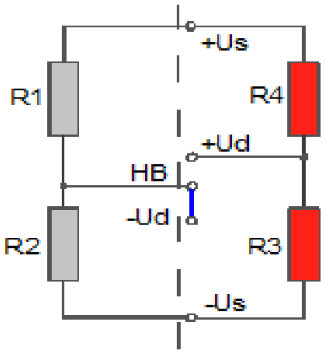

Half bridge: R3, R4 active, R1, R2 internal

3.4 Strain gauge quarter bridge

Connect the active strain gauge R3 in 3-wire technology to +Ud, QB and –Us (–Us as in 3.2). QB is the pad for 350 Ω or for 1000 Ω. The internal half bridge R1, R2 is activated with a solder bridge from –Ud to HB:

Connection	Ch 1	Ch 2	Ch 3	Ch 4	Ch 5	Ch 6
Signal + (+Ud)	17	16	15	14	13	12
Solder bridge from –Ud …	33	31	29	22	20	18
… to HB (half bridge)	32	30	28	23	21	19
QB 350 Ω	57	56	55	54	53	52
QB 1000 Ω	63	62	61	60	59	58

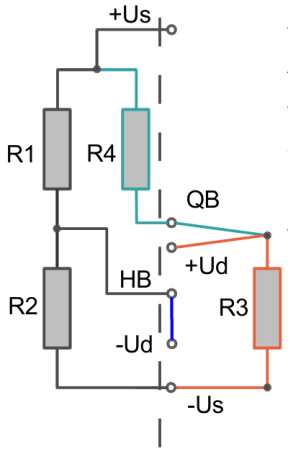

Quarter bridge: R3 active in 3-wire technology

3.5 Voltage input 0 … 10 V

The voltage input UE (single-ended) measures 0 … 10 V against –Us; –Us is at the potential of the battery negative pole. Channels 2 … 6 only. The voltage input is not calibrated.

Connection	Ch 1	Ch 2	Ch 3	Ch 4	Ch 5	Ch 6
Reference (–Us)	–	43	42	36	35	34
Voltage input UE	–	50	49	47	46	45

Connect the cable shield to the negative pole of the battery or charging connection (pad 7).

3.6 Further connections

Connection	Pad	Note
Battery negative pole	64	lithium-ion battery 3.7 V
Battery positive pole	65	
Charging ground	7	
Charging V+	8	4.5 … 5.5 V, 0.5 A
Incremental encoder index (home/index/Z)	4	channel 7
Incremental encoder signal A	5	channel 7

Connection	Pad	Note
Incremental encoder signal B	6	channel 7
Auxiliary voltage 3.3 V	25	for active sensors or encoders, 10 mA max.
Ground (GND)	26	for encoder and auxiliary voltage
Tare (zeroing)	24	connect to GND for at least 2 s; function configurable by software
Threshold output 1	38	
Threshold output 2	37	
Trigger input	39	e.g. for the data logger (6.1)
IO_1	27	output of the Bluetooth controller
IO_2	40	output of the Bluetooth controller
GND_IO	41	ground of the digital inputs and outputs
IO_3	48	on/off key or switch for the measuring part (5.2)
TEDS	51	data line of the TEDS memory, channel 1 only

3.7 Note on the bridge circuit

The permissible range for +Ud and –Ud is 1.32 ... 1.68 V. An asymmetrical series resistor (on one side in +Us or –Us) may be 26 % of the bridge resistance at most:

Bridge resistance	Series resistor max.
350 Ω	91 Ω
700 Ω	182 Ω
1000 Ω	260 Ω
1400 Ω	364 Ω

4 Commissioning

4.1 PC and software

Configuration and measurement are done with a Windows software via Bluetooth Classic (SPP); the menu names in this manual are those of the software. The PC needs a Bluetooth adapter. Software and additional descriptions (communication protocol, Bluetooth Low Energy services) on request from octogon.

4.2 Pairing and connecting

1. Connect a charged battery and bring the module close to the PC.
2. Add a new device in the Bluetooth settings of Windows. The module appears under its serial number (nameplate). With Windows 11, set Bluetooth device discovery to advanced so that more devices are shown.
3. Windows creates a virtual COM port for the module. The number is shown in the further Bluetooth options (the outgoing port) or in the Device Manager as a serial port over Bluetooth.
4. Start the PC software, choose Add Channel, enter device model and COM port and select the required channels (Open all input channels opens all of them).
5. After connecting, LED A (Bluetooth) and LED B (measuring part on) are lit.

Pairing is only needed once; with the same PC the COM port number also stays the same. Pair again with a different PC or a different module.

4.3 Setting the real-time clock

After first connecting the battery, after a battery change or if the battery was empty, set the real-time clock – above all before logging to SD card: Device → Advanced Settings → Administration, on the right under Device RTC time click Sync (choose Set local time or Set UTC first). The resettable operating hours counter can also be reset there.

4.4 Setting up the sensor

So that the amplifier displays and records physical values correctly, each channel is set to its sensor (Configuration tab, select the channel with Actual Channel):

– Input Type: choose input type and measuring range, e.g. bridge ± 2 mV/V or voltage input. The measuring range should be at least as large as the rated output of the sensor. Full, half or quarter bridge results from the wiring (chapter 3), not from the software.

– User Scaling: enter the measuring range of the sensor (Physical Full Scale) and the rated output at nominal load (Electrical Full Scale output, from the test certificate), Calculate and then OK / Set. After changing the Input Type the scaling is not adjusted automatically – check it afterwards.

– Set Zero (one channel) or Set All Zero (all channels): zero balance, stored in the device.

– Data Frequency: measured values per second, applies to all channels. The lower, the lower the noise.

– Sensor with TEDS on channel 1: scaling and unit are taken over automatically. Switch off or display the TEDS data under Sensor → TEDS.

4.5 If the connection fails

Message when opening	Cause and remedy
Error 2	COM port number wrong: check the number (4.2).
Error 5	COM port is used by another program: close it.
Error 121	battery weak or not connected: charge or connect the battery.
no answer (timed out)	no supply or wrong device model under Add Channel; Windows may have assigned the COM port number twice (Device Manager, hidden devices).

5 Bluetooth operation

5.1 Bluetooth mode

Settings under Device → Advanced Settings → Interface → Bluetooth Settings (Open Dialogue). While the dialogue is open, the measurement data transmission is stopped.

– Classic (SPP): full configuration and continuous measurement data transmission; required for the PC software.

– Low Energy (GATT): read measured values and battery voltage, e.g. with a BLE/GATT app on a smartphone; cannot be used with the PC software. To switch: select Low Energy, Store to device, then close the PC software. Back to Classic only with a GATT app (description on request from octogon).

– Maximum Power for BT Low Energy: transmission power in Low Energy mode, 7 dBm ex works. Less saves battery but reduces the range; below –3 dBm not recommended.

– Battery Voltage: battery voltage. Below 3.7 V charge the battery.

5.2 Measuring part when disconnected

With an active Bluetooth connection (LED A on) the measuring part is always switched on. What happens after disconnecting is set in the same dialogue under On / Off state of measuring amp when BT connection is closed. The real-time clock keeps running as long as the battery is connected.

Setting	Behaviour after disconnecting
Device switches off	measuring part switches off, standby with very low consumption (as delivered).
Device remains on	measuring part remains on, e.g. for permanent logging to SD card.
Periodical Logger	measuring part is switched on briefly and periodically by the real-time clock and writes one row of measured values (6.1, Single Log periodically) – battery saving mode.
On/Off by Key	on/off with a key at IO_3 (pad 48).
On/Off by Switch	on/off with a switch at IO_3 (pad 48).

5.3 Current consumption

Measured current consumption depending on the mode (measuring part off/on; Periodical Logger with interval in seconds or minutes):

Bluetooth mode	Measuring part off	Measuring part on	Logger, seconds	Logger, minutes
Low Energy	1.2 mA	53 mA	48 mA	1.2 mA
Classic (SPP)	0.78 mA	62.3 mA	48 mA	1.2 mA

Example: logging to SD card at 10 rows/s with Bluetooth disconnected needs about 60 mA. The operating time depends on the capacity of the connected battery.

6 Data logger

6.1 Configuring the logging

Insert the micro SD card (cards inserted at power-on are mounted automatically), check the real-time clock (4.3), then Device → Advanced Settings → Administration → Measuring values Logger → Settings. Under Data Recording:

Mode	Meaning
Disabled	no logging
Log permanently (if device on)	permanent logging as long as the measuring part is on and a card is inserted
Single Log by Command	one row of measured values per command, e.g. button Log One Row
Single Log periodically	one row per interval: 3 … 59 s (measuring part stays on, little saving) or minutes, hours, days (standby in between, very power-saving)
Log while Trigger Input = active	logging while the trigger input (pad 39) is active and the measuring part is on; the digital input must be configured for this

– Logging Period: logging rate as a multiple (Multiply TX freq by) or a fraction (Divide frequency by) of the rate transmitted via Bluetooth. A high rate on the card with a low radio rate avoids connection problems.

– File Format: leave Print File Header switched on (otherwise the later import becomes inaccurate); Time Stamp e.g. Both Date & Time.

– File Size: maximum number of rows or duration per file; a new file is then created. At least 1 s, because the file name is formed from date and time including the second.

– For logging without a Bluetooth connection keep the measuring part switched on (5.2: Device remains on or Periodical Logger).

6.2 Indicators and buttons

Element	Meaning
Card Inserted	card inserted and mounted
Logging File Open	file open for writing – do NOT remove the card
Currently Logging	logging in progress
Open File / Close File	open file or end logging and close file
Mount SD / Eject SD	mount the inserted card or unmount it, after which it may be removed
Start Logging	start logging (Log permanently)
Log One Row	write one row (Single Log by Command)

6.3 Downloading files

The files are stored on the card as readable text and can be copied via Bluetooth without removing the card: File → Device File Browser (or Administration → File Browser). Recently logged downloads the last written file; with Selected File, mark a file in the directory M<year>_<month> and click Download File. Duration about file size in kB × 0.12 s. Afterwards the file can be converted to TDMS format and opened with the File Monitor; this is not required.

7 Technical data

7.1 Inputs

Feature	Value
Channels	6 analog + 1 digital for pulses, 1 ... 7 channels selectable
Channel 1	strain gauge full, half or quarter bridge · reads TEDS
Channel 2 ... 6	strain gauge bridge or voltage 0 ... 10 V (single-ended)
Channel 7	incremental encoder A, B, index or square wave · counter, frequency, speed
Input sensitivity	steps 0.5 · 1.0 · 2.0 · 8 mV/V · continuously 0.1 ... 8 mV/V
Bridge completion	350 Ω or 1000 Ω (half and quarter bridge)
Bridge excitation	3 V
Input resistance, voltage	300 kΩ
Zero adjustment	digital by software or tare input · tolerance 2 LSB · 1 ms

7.2 Accuracy and measuring rate

Feature	Value
Accuracy class	0.1 %
Resolution	16 bit · < 100 nV/V
Sampling rate	50 kHz
Data rate	1 ... 500 values/s
Logging to microSD	up to 3000 values/s

7.3 Wireless and data logger

Feature	Value
Radio	2.4 GHz · Bluetooth 4.0
Bluetooth Classic	Serial Port Profile (SPP): full configuration, continuous measured data
Bluetooth LE	GATT services for measured values and battery voltage, e.g. by smartphone
Data logger	microSD card · continuous recording, intervals with battery saving mode, start by digital input · files can also be downloaded via Bluetooth
Real-time clock	time stamps in the data files
Programming	function library (DLL) with C header · LabVIEW library · own routines in the script language of the radio module

7.4 Digital inputs and outputs

Feature	Value
Threshold outputs	2, for channel 1
Tare input	zeroes all channels at once · trigger level 2.8 ... 3.3 V, rising edge
Trigger input	starts recording
Programmable	3 inputs/outputs and 1 LED
Auxiliary supply	3.3 V, max. 10 mA for active sensors or encoders

7.5 Power supply

Feature	Value
Supply	Li-ion or Li-Po battery · 3.7 ... 4.2 V
Charging circuit	built in · charging input 4.5 ... 5.5 V, trickle charging with 5 V
Current consumption	0.7 ... 130 mA
Internal values	device temperature and battery voltage

7.6 Environment and mechanics

Feature	Value
Nominal temperature	0 … +65 °C
Service temperature	–20 … +85 °C
Protection class	IP20 / IP44
Dimensions	50 × 20 × 17 mm
Weight	29 g
Housing	plastic, fully potted against vibration
Connection	gold-plated solder pads · wires up to 0.09 mm² (AWG 28) · soldering temperature max. 320 °C

8 Dimensions

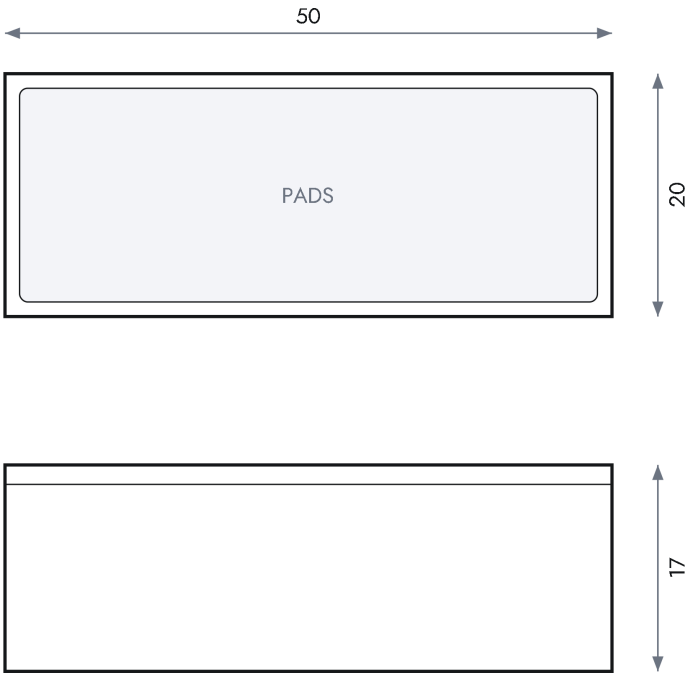

50 × 20 × 17 mm, top and side view; the outline is schematic. The solder pads are on top. Dimensions in mm.

9 Maintenance

Charge the battery in good time (5.1). Check solder joints, wires and battery for damage at regular intervals. The module is potted and cannot be repaired; replace a damaged module.