6-CHANNEL WIRELESS AMPLIFIER

AMPLIFIER



- 6 CHANNELS FOR STRAIN GAUGES AND 0 ... 10 V
- BLUETOOTH CLASSIC AND LE
- DATA LOGGER ON MICROSD
- 50 × 20 × 17 mm · 29 g

mV/V **Bluetooth** **2,4 GHz**

VERSION

Feature	Available version
Design	module with gold-plated solder pads, fully potted in a plastic housing
Scope of delivery	connector for one battery · microSD card 32 GB with adapter · operating manuals
Battery	not included – Li-ion or Li-Po, 3.7 V
Software	Windows program for configuration, measurement and logger via Bluetooth Classic

office@octogon.org | +43 676 3628453
octogon GmbH | Roseggerstrasse 16 8700 Leoben | Austria

V00x | 11/2026 | © octogon GmbH
www.octogon.org

OVERVIEW

Measures up to six strain gauge channels without cables – with Bluetooth, microSD logger and charger on 50 × 20 mm.

The EFEA is a miniature measuring amplifier for measurements on moving or hard-to-reach parts. Channel 1 takes strain gauge full, half or quarter bridges and reads the TEDS data of the sensor; channels 2 to 6 can each be set as a strain gauge bridge or as a 0 … 10 V voltage input. A seventh channel counts pulses of an incremental encoder or measures frequency and speed. Measured values go via Bluetooth Classic to a PC or via Bluetooth LE to a smartphone and can at the same time be written to a microSD card with time stamps – up to 3000 values per second, in intervals with battery saving mode or triggered by a digital input. The module runs on a Li-ion or Li-Po battery, charged by the built-in charging circuit. Sensors, battery and charging voltage are soldered directly to gold-plated pads; full potting protects the electronics against vibration.

6 + 1	0.1 %	3000 /s	29 g
Channels + pulse input	Accuracy class	Logging to microSD	Weight

MEASUREMENT

- Channel 1: strain gauge bridge, reads TEDS
- Channel 2 … 6: bridge or 0 … 10 V
- Channel 7: encoder, frequency, speed
- 0.1 … 8 mV/V continuously
- Completion 350 Ω or 1000 Ω
- 16 bit, sampling 50 kHz

WIRELESS, LOGGER AND SUPPLY

- Bluetooth Classic (SPP) and LE (GATT)
- microSD logger with real-time clock
- 2 threshold outputs, tare and trigger input
- Li-ion or Li-Po battery 3.7 V
- Built-in charging circuit
- 0 … +65 °C, IP20 / IP44

VIEWS

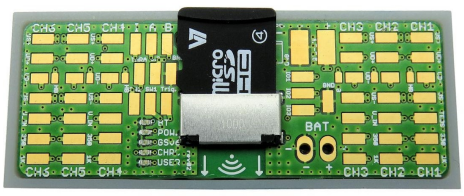

Top view with microSD card

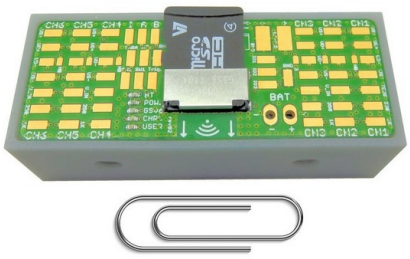

Size compared with a paper clip

TECHNICAL DATA

INPUTS

Channels	6 analog + 1 digital for pulses, 1 … 7 channels selectable
Channel 1	strain gauge full, half or quarter bridge · reads TEDS
Channel 2 … 6	strain gauge bridge or voltage 0 … 10 V (single-ended)
Channel 7	incremental encoder A, B, index or square wave · counter, frequency, speed
Input sensitivity	steps 0.5 · 1.0 · 2.0 · 8 mV/V · continuously 0.1 … 8 mV/V
Bridge completion	350 Ω or 1000 Ω (half and quarter bridge)
Bridge excitation	3 V
Input resistance, voltage	300 kΩ
Zero adjustment	digital by software or tare input · tolerance 2 LSB · 1 ms

ACCURACY AND MEASURING RATE

Accuracy class	0.1 %
Resolution	16 bit · < 100 nV/V
Sampling rate	50 kHz
Data rate	1 … 500 values/s
Logging to microSD	up to 3000 values/s

ENVIRONMENT AND MECHANICS

Nominal temperature	0 … +65 °C
Service temperature	–20 … +85 °C
Protection class	IP20 / IP44
Dimensions	50 × 20 × 17 mm
Weight	29 g
Housing	plastic, fully potted against vibration
Connection	gold-plated solder pads · wires up to 0.09 mm² (AWG 28) · soldering temperature max. 320 °C

WIRELESS AND DATA LOGGER

Radio	2.4 GHz · Bluetooth 4.0
Bluetooth Classic	Serial Port Profile (SPP): full configuration, continuous measured data
Bluetooth LE	GATT services for measured values and battery voltage, e.g. by smartphone
Data logger	microSD card · continuous recording, intervals with battery saving mode, start by digital input · files can also be downloaded via Bluetooth
Real-time clock	time stamps in the data files
Programming	function library (DLL) with C header · LabVIEW library · own routines in the script language of the radio module

DIGITAL INPUTS AND OUTPUTS

Threshold outputs	2, for channel 1
Tare input	zeroes all channels at once · trigger level 2.8 … 3.3 V, rising edge
Trigger input	starts recording
Programmable	3 inputs/outputs and 1 LED
Auxiliary supply	3.3 V, max. 10 mA for active sensors or encoders

POWER SUPPLY

Supply	Li-ion or Li-Po battery · 3.7 … 4.2 V
Charging circuit	built in · charging input 4.5 … 5.5 V, trickle charging with 5 V
Current consumption	0.7 … 130 mA
Internal values	device temperature and battery voltage

LED INDICATORS

BT	Bluetooth connected
POW.	measuring core on / off
GSV6	status of measuring core, flash codes; on or flashing slowly: file on SD card open – do not remove the card
CHRG	battery charging
USER	programmable

ELECTRICAL CONNECTION

PADS PER CHANNEL (1 … 6)

+Us · supply	11 · 10 · 9 · 3 · 2 · 1
+Ud · output	17 · 16 · 15 · 14 · 13 · 12
–Ud · output	33 · 31 · 29 · 22 · 20 · 18
–Us · supply	44 · 43 · 42 · 36 · 35 · 34
HB · half bridge	32 · 30 · 28 · 23 · 21 · 19
Q350 · quarter 350 Ω	57 · 56 · 55 · 54 · 53 · 52
Q1k · quarter 1 kΩ	63 · 62 · 61 · 60 · 59 · 58
UE · 0 … 10 V	– · 50 · 49 · 47 · 46 · 45

BATTERY AND CHARGING

64	Battery –
65	Battery +
7	Charging ground
8	Charging + 4.5 … 5.5 V

DIGITAL INPUTS AND OUTPUTS

4	Encoder index
5	Encoder A
6	Encoder B
24	Tare: to GND, at least 2 s
25	Auxiliary 3.3 V, max. 10 mA
26	GND
38	Threshold output 1
37	Threshold output 2
39	Trigger input
27	IO 1, programmable
40	IO 2, programmable
48	IO 3 / on-off key
41	GND IO
51	TEDS, channel 1

PAD LAYOUT

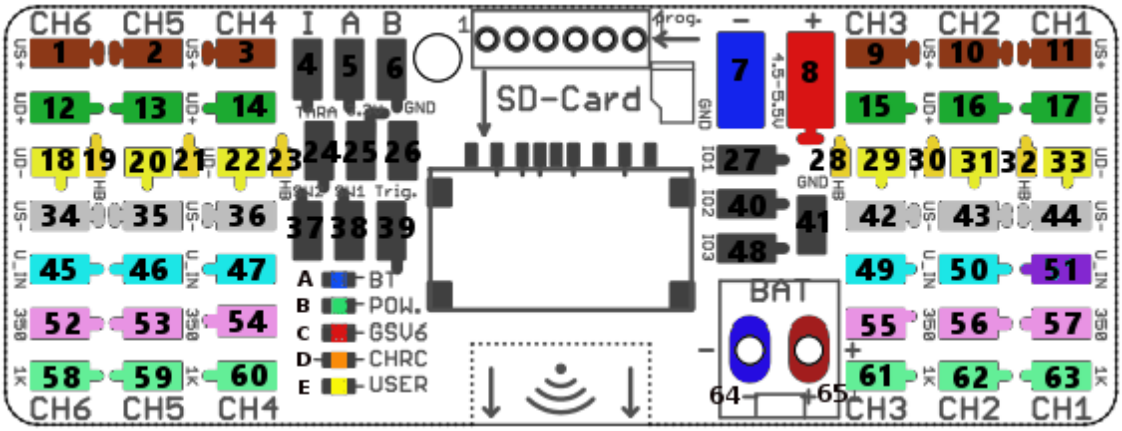

Half bridge: active strain gauges to +Us, +Ud and –Us, link from HB to –Ud. Quarter bridge: strain gauge in 3-wire technique to +Ud, Q350 or Q1k and –Us, link from HB to –Ud; solder bridges are closed for this. The UE inputs (channel 2 … 6 only) measure against –Us, the negative pole of the battery. A one-sided series resistor in +Us or –Us may be at most 26 % of the bridge resistance (350 Ω: 91 Ω · 700 Ω: 182 Ω · 1000 Ω: 260 Ω · 1400 Ω: 364 Ω).

DIMENSIONS (mm)

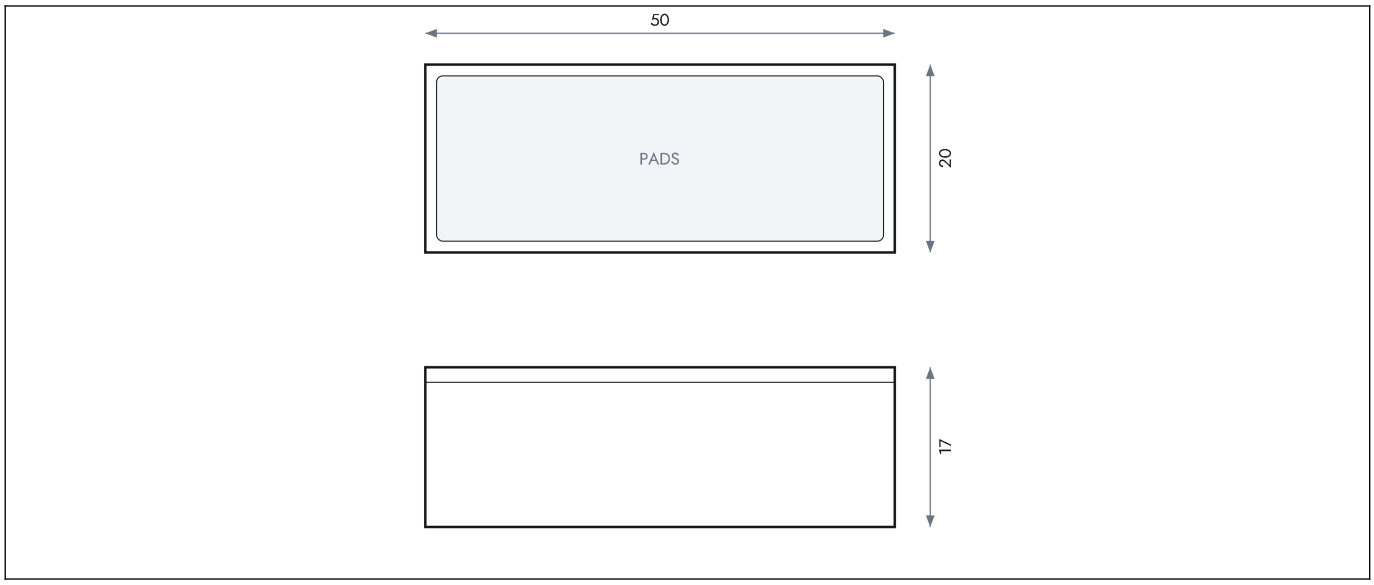

50 × 20 × 17 mm, top and side view; the outline is schematic. The solder pads are on top.

COMPLIANCE AND CERTIFICATION

Protection Rating	IP20 / IP44
HS-CODE	9032 9000